EMPIRE
COMFORT SYSTEMS
SINCE 1932

# INSTALLATION INSTRUCTIONS AND OWNER'S MANUAL

## Loft Vent Free Fireplace Insert

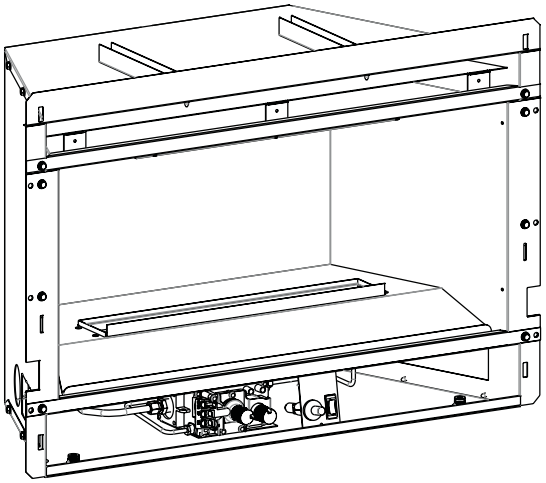

GAS-FIRED
UL
LISTED

Shown without required front.

**UNVENTED**
**GAS FIREPLACE**
**MODELS**

**VFL20IN3210(N,P)-1**
**VFL20IN32(N,P)-1**
**VFL20IN92(N,P)-1**

**VFL28IN32(N,P)-1**
**VFL28IN92(N,P)-1**

| | |
|---|---|
| **Installer:** | **Leave this manual with the appliance.** |
| **Consumer:** | **Retain this manual for future reference.** |

NATIONAL FIREPLACE INSTITUTE®
NFI
CERTIFIED
www.nficertified.org

We suggest that our gas hearth products be installed and serviced by professionals who are certified in the U.S. by the National Fireplace Institute® (NFI) as NFI Gas Specialists.

**WARNING: If the information in these instructions are not followed exactly, a fire or explosion may result causing property damage, personal injury or loss of life.**

- **Do not store or use gasoline or other flammable vapors and liquids in the vicinity of this or any other appliance.**
- **WHAT TO DO IF YOU SMELL GAS**
  - **Do not try to light any appliance.**
  - **Do not touch any electrical switch; do not use any phone in your building.**
  - **Immediately call your gas supplier from a neighbor's phone. Follow the gas supplier's instructions.**
  - **If you cannot reach your gas supplier, call the fire department.**
- **Installation and service must be performed by a qualified installer, service agency or the gas supplier.**

**This appliance may be installed in an aftermarket, permanently located, manufactured (mobile) home, where not prohibited by local codes.**

**This appliance is only for use with the type of gas indicated on the rating plate. This appliance is not convertible for use with other gases.**

**This is an unvented gas-fired heater. It uses air (oxygen) from the room in which it is installed. Provisions for adequate combustion and ventilation air must be provided. Refer to page 13.**

**WARNING: If not installed, operated and maintained in accordance with the manufacturer's instructions, this product could expose you to substances in fuel or from fuel combustion which can cause death or serious illness.**

**WATER VAPOR: A BY-PRODUCT OF UNVENTED ROOM HEATERS**
**Water vapor is a by-product of gas combustion. An unvented room heater produces approximately one ounce (30ml) of water for every 1,000 BTU's (.3KW's) of gas input per hour. Refer to page 13.**

# TABLE OF CONTENTS


| SECTION | PAGE |
|---|---|
| IMPORTANT SAFETY INFORMATION | 3 |
| SAFETY INFORMATION FOR USERS OF LP-GAS | 4 |
| IMPORTANT INSTALLATION GUIDELINES | 5 |
| INTRODUCTION | 6 |
| SPECIFICATIONS | 7 |
| INSTALLATION IN A FIREPLACE | 8 |
| FIREPLACE INSERT DIMENSIONS | 9 |
| BUILT-IN FIREPLACE INSTALLATION | 10 |
| VFL20IN FIREPLACE WITH SURROUND DIMENSIONS | 11 |
| VFL28IN FIREPLACE WITH SURROUND DIMENSIONS | 12 |
| WATER VAPOR: A BY-PRODUCT OF UNVENTED ROOM HEATERS | 13 |
| PROVISIONS FOR ADEQUATE COMBUSTION & VENTILATION AIR | 13-14 |
| GAS SUPPLY | 15-16 |
| CLEARANCES | 16-18 |
| COMBUSTIBLE MATERIALS | 19 |
| ALTERNATE ON/OFF SWITCH INSTALLATION FOR MILLIVOLT SYSTEMS | 20 |
| DECORATIVE ACCESSORY INSTALLATION | 21 |
| OPERATION INSTRUCTIONS/FLAME APPEARANCE | 22 |
| MILLIVOLT CONTROL | |
| VALVE LIGHTING INSTRUCTIONS | 23 |
| VALVE WIRING | 24 |
| MULTIFUNCTION REMOTE IP (MRIP) | |
| LIGHTING INSTRUCTIONS | 25 |
| WIRING | 26 |
| SPECIFICATIONS | 27 |
| OPERATING INSTRUCTIONS | 28 |
| REMOTE INSTRUCTIONS | 29-33 |
| TROUBLESHOOTING | 34-36 |
| PILOT FLAME CHARACTERISTICS | 37-38 |
| CLEANING AND SERVICING | 38 |
| TROUBLESHOOTING | 39 |
| VFL20IN PARTS LIST | 40 |
| VFL28IN PARTS LIST | 41 |
| EXPLODED VIEW | 42 |
| MASTER PARTS DISTRIBUTOR LIST | 43 |
| HOW TO ORDER REPAIR PARTS | 43 |
| DF(20,28LBL SURROUND FRONTS FOR FIREPLACES | 44 |
| SURROUND FRONTS FOR WALL MOUNTS | 45 |
| APPLIANCE SERVICE HISTORY | 46 |
| WARRANTY | 47 |

# IMPORTANT SAFETY INFORMATION

⚠ **DANGER**: Indicates a hazardous situation which, if not avoided, will result in death or serious injury.

⚠ **WARNING**: Indicates a hazardous situation which, if not avoided, could result in death or serious injury.

⚠ **CAUTION**: Indicates a hazardous situation which, if not avoided, could result in minor or moderate injury.

***NOTICE***: Addresses practices not related to personal injury.

- **An unvented room heater having an input rating of more than 6,000 Btu per hour shall not be installed in a bathroom**
- **An unvented room heater having an input rating of more than 10,000 Btu per hour shall not be installed in a bedroom or bathroom.**
- **Due to high temperatures, the appliance should be located out of traffic and away from furniture and draperies.**
- **Children and adults should be alerted to the hazard of high surface temperature and should stay away to avoid burns or clothing ignition.**
- **Young children should be carefully supervised when they are in the same room with the appliance.**
- **Do not place clothing or other flammable material on or near the appliance.**
- **Avoid the use of scented air fresheners (plug in type air fresheners, etc. ) while the burner is in operation. Air fresheners produce a residue in the air similar to candles and may produce a soot like substance.**
- **Avoid the use of scented or decorative candles while the burner is in operation. Candles produce a residue in the air that creates a soot like substance. Burning candles while the log set is operating magnifies the problem. It should be noted that candles, in general, produce soot. The amount of time burned and the quantity of candles burned will determine the amount of soot produced and deposited.**
- **Installation and repair should be done by a QUALIFIED SERVICE PERSON. This appliance should be inspected before use and at least annually by a professional service person. More frequent cleaning may be required due to excessive lint from carpeting, bedding materials, etc. It is imperative that control compartments, burners and circulating air passageways of the appliance be kept clean.**
- **DO NOT use this room heater if any part has been under water. Immediately call a qualified service technician to inspect the room heater and to replace any part of the control system and any gas control which has been under water.**
- **You must operate heater with fireplace screen in place.**
- **Do not place trash, logs or other articles on the log set during operation.**
- **During manufacturing, fabricating and shipping, various components of this appliance are treated with certain oils, films or bonding agents. These bonding agents are not harmful but may produce annoying smoke and smells as they are burned off during initial operation of the appliance. This is a normal temporary occurrence. A window should be opened during the initial bake out period.**
- **Correct installation of the ceramic fiber logs, proper location of the heater and annual cleaning are necessary to avoid potential problems with sooting. Sooting, resulting from improper installation or operation, can settle on surfaces outside the fireplace. See instructions for proper installation.**
- ⚠ **WARNING: Do not allow fans to blow directly into the fireplace. Avoid any drafts that alter burner flame patterns.**
- ⚠ **WARNING: Do not use a blower insert, heat exchanger insert or other accessory not approved for use with this heater.**
- ⚠ **WARNING! This fireplace needs fresh air for ventilation to run properly. This fireplace has an ODS (oxygen depletion sensor) which will shut down the heater if adequate fresh air is not available. See troubleshooting section in the instructions.**
- ⚠ **WARNING: DO NOT operate this appliance unless all components including logs, burners, and controls are in good working condition. Never operate this appliance if any log or twig is broken, or out of their intended position. Refer to the Log set placement instructions for correct log and twig positioning.**
  **Replacement components are available through your local dealer as indicated in the How to Order Repair Parts section of the appliance manual.**
- **Keep appliance area clear and free from combustible materials, gasoline and other flammable vapors and liquids.**
- ⚠ **WARNING: Failure to keep the primary air opening(s) of the burner(s) clean may result in sooting and property damage.**

## ⚠ WARNING

**When used without adequate combustion and ventilation air, heater may give off CARBON MONOXIDE, an odorless, poisonous gas.**

**Do not install heater until all necessary provisions are made for combustion and ventilation air. Consult the written instructions provided with the heater for information concerning combustion and ventilation air. In the absence of instructions, refer to the National Fuel Gas Code, ANSI Z223.1/NFPA 54, Air for Combustion and Ventilation, or applicable local codes.**

**This heater is equipped with a PILOT LIGHT SAFETY SYSTEM designed to turn off the heater if not enough fresh air is available.**

**DO NOT TAMPER WITH PILOT LIGHT SAFETY SYSTEM!**

**If heater shuts off, do not relight until you provide fresh air.**

**If heater keeps shutting off, have it serviced. Keep burner and control compartment clean.**

**CARBON MONOXIDE POISONING MAY LEAD TO DEATH.**

**Early signs of carbon monoxide poisoning resemble the flu, with headache, dizziness and/or nausea. If you have these signs, heater may not be working properly. Get fresh air at once! Have heater serviced.**

**Some people — pregnant women, persons with heart or lung disease, anemia, those under the influence of alcohol , those at high altitudes — are more affected by carbon monoxide than others.**

**The pilot light safety system senses the depletion of oxygen at its location. If this heater is installed in a structure having a high vertical dimension, the possibility exists that the oxygen supply at the higher levels will be less than that at the heater. In this type of application, a fan to circulate the structure air will minimize this effect. The use of this fan will also improve the comfort level in the structure. When a fan is used to circulate air, it should be located so that the air flow is not directed at the burner.**

# SAFETY INFORMATION FOR USERS OF LP-GAS

**Propane (LP-Gas) is a flammable gas which can cause fires and explosions. In its natural state, propane is odorless and colorless. You may not know all the following safety precautions which can protect both you and your family from an accident. Read them carefully now, then review them point by point with the members of your household. Someday when there may not be a minute to lose, everyone's safety will depend on knowing exactly what to do. If, after reading the following information, you feel you still need more information, please contact your gas supplier.**

## LP-GAS WARNING ODOR

**If a gas leak happens, you should be able to smell the gas because of the odorant put in the LP-Gas.**
**That's your signal to go into immediate action!**

- Do not operate electric switches, light matches, use your phone. Do not do anything that could ignite the gas.
- Get everyone out of the building, vehicle, trailer, or area. Do that IMMEDIATELY.
- Close all gas tank or cylinder supply valves.
- LP-Gas is heavier than air and may settle in low areas such as basements. When you have reason to suspect a gas leak, keep out of basements and other low areas. Stay out until firefighters declare them to be safe.
- Use your neighbor's phone and call a trained LP-Gas service person and the fire department. Even though you may not continue to smell gas, do not turn on the gas again. Do not re-enter the building, vehicle, trailer, or area.
- Finally, let the service man and firefighters check for escaped gas. Have them air out the area before you return. Properly trained LP-Gas service people should repair the leak, then check and relight the gas appliance for you.

## NO ODOR DETECTED - ODOR FADE

**Some people cannot smell well. Some people cannot smell the odor of the chemical put into the gas. You must find out if you can smell the odorant in propane.** Smoking can decrease your ability to smell. Being around an odor for a time can affect your sensitivity or ability to detect that odor. Sometimes other odors in the area mask the gas odor. People may not smell the gas odor or their minds are on something else. Thinking about smelling a gas odor can make it easier to smell.

**The odorant in LP-gas is colorless, and it can fade under some circumstances.** For example, if there is an underground leak, the movement of the gas through soil can filter the odorant. Odorants in LP-Gas also are subject to oxidation. This fading can occur if there is rust inside the storage tank or in iron gas pipes.

The odorant in escaped gas can adsorb or absorb onto or into walls, masonry and other materials and fabrics in a room. That will take some of the odorant out of the gas, reducing its odor intensity. LP-Gas may stratify in a closed area, and the odor intensity could vary at different levels. Since it is heavier than air, there may be more odor at lower levels. Always be sensitive to the slightest gas odor. If you detect any odor, treat it as a serious leak. Immediately go into action as instructed earlier.

## SOME POINTS TO REMEMBER

- **Learn to recognize the odor of LP-gas.** Your local LP-Gas Dealer can give you a "Scratch and Sniff" pamphlet. Use it to find out what the propane odor smells like. If you suspect that your LP-Gas has a weak or abnormal odor, call your LP-Gas Dealer.
- If you are not qualified, do not light pilot lights, perform service, or make adjustments to appliances on the LP-Gas system. If you are qualified, consciously think about the odor of LP-Gas prior to and while lighting pilot lights or performing service or making adjustments.
- Sometimes a basement or a closed-up house has a musty smell that can cover up the LP-Gas odor. Do not try to light pilot lights, perform service, or make adjustments in an area where the conditions are such that you may not detect the odor if there has been a leak of LP-Gas.
- Odor fade, due to oxidation by rust or adsorption on walls of new cylinders and tanks, is possible. Therefore, people should be particularly alert and careful when new tanks or cylinders are placed in service. Odor fade can occur in new tanks, or reinstalled old tanks, if they are filled and allowed to set too long before refilling. Cylinders and tanks which have been out of service for a time may develop internal rust which will cause odor fade. If such conditions are suspected to exist, a periodic sniff test of the gas is advisable. **If you have any question about the gas odor, call your LP-gas dealer. A periodic sniff test of the LP-gas is a good safety measure under any condition.**
- If, at any time, you do not smell the LP-Gas odorant and you think you should, assume you have a leak. Then take the same immediate action recommended above for the occasion when you do detect the odorized LP-Gas.
- If you experience a complete "gas out," (the container is under no vapor pressure), turn the tank valve off immediately. If the container valve is left on, the container may draw in some air through openings such as pilot light orifices. If this occurs, some new internal rusting could occur. If the valve is left open, then treat the container as a new tank. Always be sure your container is under vapor pressure by turning it off at the container before it goes completely empty or having it refilled before it is completely empty.

# IMPORTANT INSTALLATION GUIDELINES

**Proper Primary Airflow into Burner**

For proper burner operation and flame appearance, the flow of primary air into the venturi tube, located on the rear of the burner, must not be reduced. This flow of air is reduced if dirt, lint or other obstructions build-up around or inside the venturi. Any obstruction in the venturi tube area must be removed. The flow of air into the venturi is also reduced if the gas orifice isn't centered in the venturi inlet and/or is not aligned with the venturi. Any misalignment of the burner orifice may be corrected by bending the shutter cap holding the orifice to the inlet of the venturi tube.

**Ceiling Fans or Portable Fans Installed Near Cold Air Returns**

Ceiling fans or oscillating floor type fans need to be monitored during the operation of vent-free products. If the air blows directly into the flame causing it to disrupt the flame, it should be turned off or redirected. Ceiling fans could be reversed to possibly eliminate flame impingement, and the floor fan could be redirected. Upon installation, be aware of any cold air returns or vents in the proximity of the vent free product. Any draft created around a vent-free burner can cause the flame to act irregular and create hot surfaces.

**⚠ WARNING**

Do not allow fans to blow directly into the fireplace. Avoid any drafts that alter burner flame patterns.

**⚠ WARNING**

Do not use a blower insert, heat exchanger insert or other accessory not approved for use with this heater.

**Candles**

Avoid the use of scented or decorative candles while the log set is in operation. Candles produce a residue in the air that creates a soot like substance. Burning candles while the log set is operating magnifies the problem. It should be noted that candles, in general, produce soot. The amount of time burned and the quantity of candles burned will determine the amount of soot produced and deposited.

# INTRODUCTION

**Instructions to Installer**

1. Installer must leave instruction manual with owner after installation.
2. Installer must have owner fill out and mail warranty card supplied with unvented room heater.
3. Installer should show owner how to start and operate unvented room heater.

Always consult your local Building Department regarding regulations, codes or ordinances which apply to the installation of an unvented room heater.

This appliance may be installed in an aftermarket* manufactured (mobile) home, where not prohibited by state or local codes.

*Aftermarket: Completion of sale, not for purpose of resale, from the manufacturer.

This appliance is only for use with the type of gas indicated on the rating plate. This appliance is not convertible for use with other gases.

**⚠ WARNING**

ANY CHANGE TO THIS HEATER OR ITS CONTROLS CAN BE DANGEROUS.
**Improper installation or use of the heater can cause serious injury or death from fire, burns, explosion or carbon monoxide poisoning.**

This series is design certified in accordance with American National Standard Z21.11.2 by the Canadian Standards Association Laboratories as an Unvented Room Heater and should be installed according to these instructions.

**Any alteration of the original design, installed other than as shown in these instructions or use with a type of gas not shown on the rating plate is the responsibility of the person and company making the change.**

**Millivolt 3 Series Only**
**750 Millivolt System**
When you ignite the pilot, the thermocouple produces millivolts (electrical current) which energizes the magnet in the gas valve. After 30 seconds to 1 minute time period you can release the gas control knob and the pilot will stay ON. Allow your pilot flame to operate an additional one to two minutes before you turn the gas control knob from the PILOT position to the ON position. This time period allows the millivolts (electrical energy) to build-up to a sufficient level allowing the gas control to operate properly.

**Important**
All correspondence should refer to complete Model Number, Serial Number and type of gas.

***Notice:*** During initial firing of this unit, its paint will bake out, and smoke will occur. To prevent triggering of smoke alarms, ventilate the room in which the unit is installed.

Solid-fuels shall not be burned in a masonry or *UL 127* factory-built fireplace in which an unvented room heater is installed.

**Qualified Installing Agency**
Installation and replacement of gas piping, gas utilization equipment or accessories and repair and servicing of equipment shall be performed only by a qualified agency. The term "qualified agency" means any individual, firm, corporation or company which either in person or through a representative is engaged in and is responsible for (a) the installation or replacement of gas piping or (b) the connection, installation, repair or servicing of equipment, who is experienced in such work, familiar with all precautions required and has complied with all the requirements of the authority having jurisdiction.

State of Massachusetts: The installation must be made by a licensed plumber or gas fitter in the Commonwealth of Massachusetts.
Sellers of unvented propane or natural gas-fired supplemental room heaters shall provide to each purchaser a copy of 527 CMR 30 upon sale of the unit.
In the Sate of Massachusetts, unvented propane and natural gas-fired space heaters shall be prohibited in bedrooms and bathrooms.

The installation must conform with local codes or, in the absence of local codes, with the National Fuel Gas Code, ANSI Z223.1.*
**Available from the American National Standards Institute, Inc. 1430 Broadway, New York, N.Y. 10018.*

**High Altitudes**
For altitudes/elevations above 2,000 feet (610m), ratings should be reduced at the rate of 4 percent for each 1,000 feet (305m) above sea level. Contact the manufacturer or your gas company before changing spud/orifice size.

**Well Head Gas Installations**
Some natural gas utilities use "well head" gas. This may affect the Btu output of the unit. Contact the gas company for the heating value. Contact the manufacturer or your gas company before changing spud/orifice size.

**⚠ WARNING**

This appliance is equipped for natural gas or propane gas. Field conversion is not permitted.

# SPECIFICATIONS

| VFL20IN3* | LP | NAT |
|---|---|---|
| Input Btu/hr Maximum | 20,000 | 20,000 |
| Input Btu/hr Minimum | 16,000 | 13,000 |
| Orifice | #55 | 2.1mm |
| Air Shutter Opening | 3/16" | Fully Closed |
| **VFL20IN9*** | **LP** | **NAT** |
| Input Btu/hr Maximum | 20,000 | 20,000 |
| Input Btu/hr Minimum | 14,000 | 13,000 |
| Orifice | #55 | 2.1mm |
| Air Shutter Opening | 3/16" | Fully Closed |
| **VFL20IN3*10** | **LP** | **NAT** |
| Input Btu/hr Maximum | 10,000 | 10,000 |
| Input Btu/hr Minimum | 10,000 | 10,000 |
| Orifice | #64 | #53 |
| Air Shutter Opening | Fully Closed | Fully Closed |
| **VFL28IN3*** | **LP** | **NAT** |
| Input Btu/hr Maximum | 28,000 | 28,000 |
| Input Btu/hr Minimum | 23,000 | 19,000 |
| Orifice | 1.55 | #40 |
| Air Shutter Opening | 3/16" | Fully Closed |
| **VFL28IN9*** | **LP** | **NAT** |
| Input Btu/hr Maximum | 28,000 | 28,000 |
| Input Btu/hr Minimum | 23,000 | 19,000 |
| Orifice | 1.55 | #40 |
| Air Shutter Opening | 3/16" | Fully Closed |

| Accessories | |
|---|---|
| **Remote Control Accessories** | **Description** |
| FRBC | Millivolt/IP Battery Operated Remote Control |
| FRBTC | Millivolt/IP Battery Operated Remote Control with Thermostat |
| FRBTP | Battery Operated Programmable Remote Control |
| FWS-1 | Direct Ignition/Millivolt/IP Wall Switch |
| TRW | Millivolt/IP Remote Wall Thermostat (Wireless) |
| TMV | Millivolt/IP Wall Thermostat, - Reed Switch |
| FBB7 | Variable Speed Blower |

VFL20IN units require the use of one of the following surrounds. See pages 44 and 45.

| Surround Kit | Description |
|---|---|
| DF20GBL | Decorative Front, Tempered Glass, Black |
| DF20MBL | Decorative Front, Metal Frame, Black |
| DF20LBL | Decorative Front, Louver, Glass Frame (Includes 6 x 6 Surround) |

VFL28IN units require the use of one of the following surrounds: See pages 44 and 45.

| Surround Kit | Description |
|---|---|
| DF28GBL | Decorative Front, Tempered Glass, Black |
| DF28MBL | Decorative Front, Metal Frame, Black |
| DF28LBL | Decorative Front, Louver, Glass Frame (Includes 6 x 6 Surround) |

| VFL(20,28)IN Optional Accessories | |
|---|---|
| **Part Number** | **Description** |
| FBB7 | Variable Speed Blower |
| DG-1-BKP | Decorative Glass Black Polished |
| DG-1-BUC | Decorative Glass Blue Clear |
| DG-1-CLF | Decorative Glass Frost |

Optional decorative glass and rocks are available in several different sizes and colors. Contact your Empire Dealer for more information.

# INSTALLATION IN A FIREPLACE

1. Before beginning, check to make sure there is no hidden damage to the unit. Take a minute and plan out the gas and electrical route. It is best to start with the gas line first, followed by the electrical supply requirements.
2. Minimum fireplace opening requirements are shown in **Figure 2** of this installation manual. The firebrick (refractory), glass doors, screen rails, screen mesh and log grates can be removed from a factory built fireplace in order to gain minimum gas insert opening requirements prior to installing the gas fireplace insert.

**⚠ CAUTION**

Determine the total thickness of finishing materials (i.e. stone, brick or marble) so that the proper dimensions can be maintained for installing the fireplace and decorative fronts.

3. This insert requires no hearth extensions. Combustible material on the floor may be installed up to the insert. Do not obstruct the lower louver of the insert. The original fireplace cannot be returned to solid fuel in this condition.
4. The side walls, top and floor structures of the firebox may not be altered with the exception of removable baffles and dampers. Smoke shields, shelves and baffles may be removed if attached with mechanical fasteners. The original fireplace cannot be returned to solid fuel in this condition.
5. The insert surround is tested and approved with this gas insert and may cover existing air circulation vents or grills on the solid fuel fireplace it is installed into. If the surround does not cover the entire ventilation grill surface, the exposed grill area should be left open.

***Notice*: Cutting of sheet metal parts of a fireplace in order to install the fireplace insert is prohibited.**

***Notice*: The following statement is also provided on a separate label plate in the instruction packet. Prior to installation of the fireplace insert, the installer must mechanically secure this warning plate to the inside of the fireplace for future reference as required.**

**⚠ WARNING**

**The solid fuel fireplace has been converted for use with gas only and cannot be used for burning wood or solid fuels unless all original parts have been replaced and the fireplace has been reapproved by the authority having jurisdiction.**

6. If necessary, use the leveling bolts included in the instruction pack. Screw the legs into the nuts installed in the bottom of the insert. Turn legs in until insert is level.
7. Place the insert into position
   ***Notice:*** The front flanges of the insert should be set at approximately 1" in front of the face of the fireplace.
8. Level the insert from side to side and front to back.
9. Install the insert without the surround panels attached and make all gas venting and electrical connections. If the control module, receiver and other electrical devices are pulled out to install the gas line, they must be placed back into the location where they were from the factory. The gas flexline may cross over the control module.

***Notice:*** If desired, it is acceptable to attach metal strapping or brackets (not provided) from the fireplace cavity to the insert outer jacket to secure the fireplace insert to the fireplace hearth or opening.

**⚠ WARNING**

**Verfity that all wire connections are secure.**

**If the factory built fireplace does not have gas access holes provided, an access hole of 1 1/2" diameter (37.5mm) or less may be drilled through the lower sides or bottom of the firebox in a proper workmanship like manner. This access hole must be plugged with a non-combustible insulation after the gas supply line has been installed.**

10. The surround panel assembly is attached to the fireplace after it has been installed with all the gas and electrical connections completed. Refer to instructions included with the surround panel kit.

**Ensure there are no obstructions to side air passages of decorative trim once installed on insert.**

# FIREPLACE INSERT DIMENSIONS

When planning a fireplace insert installation, it's necessary to determine:

- Gas supply piping.
- Electrical connections - for optional blower
- Whether optional accessories - devices such as a wall switch or remote control - are desired.
- Electrical supply requirements for optional blower. (120V, 60Hz, 1 Amp)
- Proper opening size of fireplace required for installation of the fireplace insert.

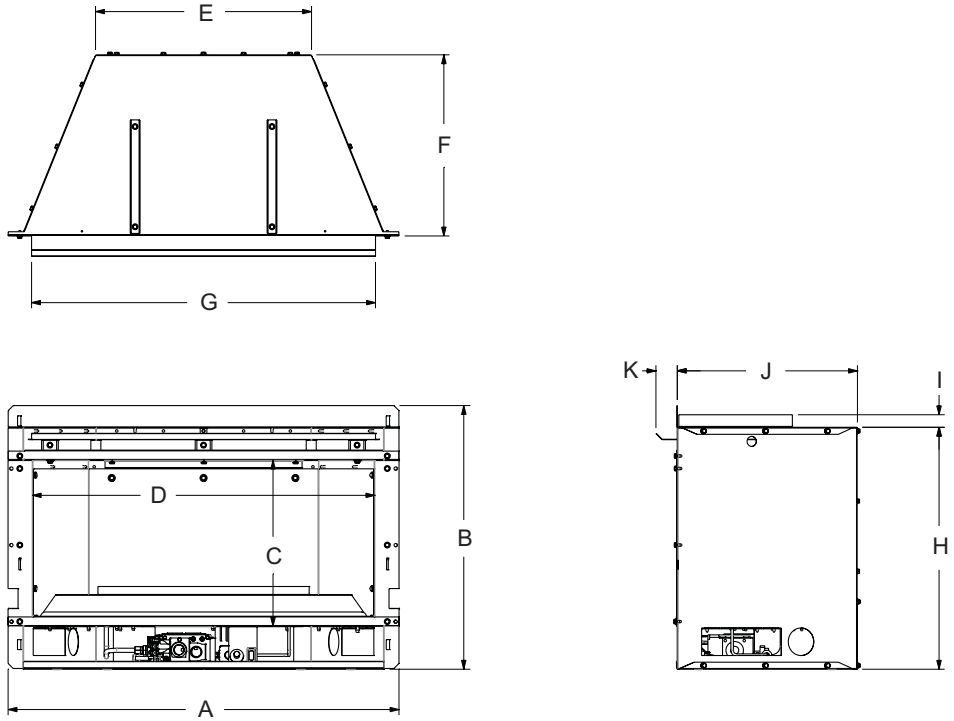


| VF FIREPLACE INSERT DIMENSIONS | | | | | | | | | | | |
|---|---|---|---|---|---|---|---|---|---|---|---|
| MODEL | A | B | C | D | E | F | G | H | I | J | K |
| VFL20IN | 29 1/4" | 19 3/4" | 12 7/16" | 25 5/8" | 16 3/16" | 13 9/16" | 25 3/4" | 18 1/8" | 15/16" | 13 1/2" | 1 5/8" |
| VFL28IN | 32 1/4" | 22 3/4" | 15 7/16" | 28 1/2" | 17 13/16" | 15" | 29 1/2" | 21 1/8" | 15/16" | 15" | 1 5/8" |

**Figure 1**

| Fireplace Opening Dimensional Information/Sizing | | | | |
|---|---|---|---|---|
| MINIMUM FIREPLACE OPENING DIMENSIONS | | | | |
| MODEL | HEIGHT A | FRONT WIDTH B | DEPTH C | REAR WIDTH D |
| VFL20IN | 19 1/4" | 26 3/4" * | 12 3/4" | 15 3/4" |
| VFL28IN | 22 1/4" | 30 3/4" * | 14 1/4" | 19" |

***Notice***: These are the minimum dimensions of a fireplace that the fireplace insert will fit into. It allows room for the box and the fireplace surround to fit onto the front of the unit. It is not intended to be used for framing dimensions. Refer to Figures 3 to 5 for framing dimensions.

*Notice: Front Width B is the minimum and maximum dimension.

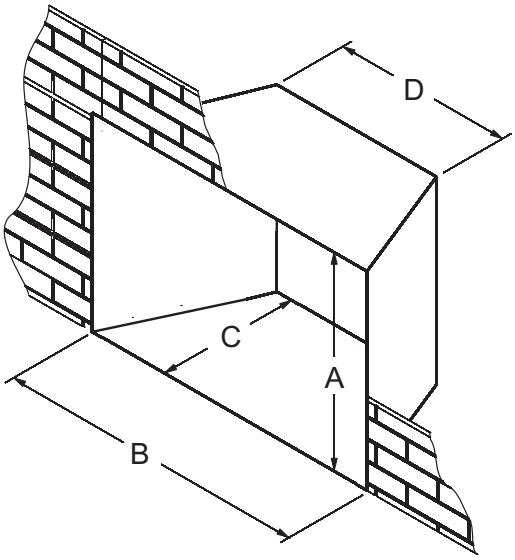


**Figure 2**

# BUILT-IN FIREPLACE INSTALLATION

In planning the installation for the fireplace, it is necessary to determine where the unit is to be installed and whether optional accessories are desired. Gas supply piping should also be planned at this time.

The fireplace can be mounted on any of these surfaces:

1. A flat hard combustible or non-combustible surface.
2. A raised platform of combustible or non-combustible material.
3. Four corners of the fireplace so contact is made on all four perimeter edges on the bottom of the unit.
   (Example: Four concrete masonry blocks.)

At this point, you should have decided what components to include in your installation, and where the fireplace is to be located. If this has not been done, stop and consult your dealer for assistance with this planning.

This unit is designed to be installed in a zero-clearance enclosure. This means the combustible material can come in contact with the firebox.

**Built-In Fireplace Installation**

Built-in installation of this fireplace involves installing the fireplace into a framed-in enclosure. This makes the front of the fireplace flush with a wall.

Frame in rough opening. Use dimensions show in Figure 3 for a conventional rough opening. Use dimensions shown in Figure 4 for corner rough opening. Use Figure 5 for an elevated installation. Be sure to provided support to the bottom of the fireplace. Be sure to provide gas line for fireplace and electrical power for optional blower assembly.

1. Gas line connections must be made at this time. When facing the appliance, the gas supply will enter on the right-hand side. See "Gas Supply" page 15 to 16.
2. Insert fireplace into enclosure. Attach to wall with screws through holes on cabinet sides.
3. Level firebox. See "Positioning, Leveling and Securing Insert" on Page 8.
4. Finished wall surface will be flush to the leading edge of fireplace top and sides.
5. If used, the surround panel assembly is installed after the fireplace has been installed with all the gas and electrical connection completed. Refer to instructions included with the surround panel kit.
6. Installation of built-in fireplace is completed.

**Rough Opening for Installing in Wall**

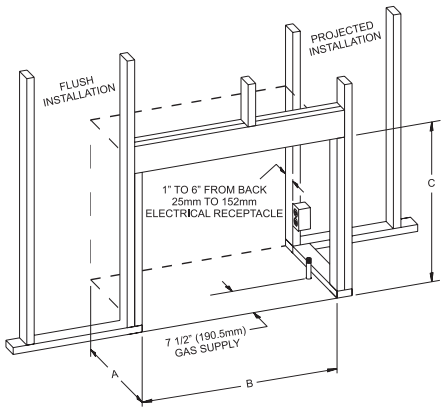


**Figure 3**

**Rough Opening for Installing in Corner**

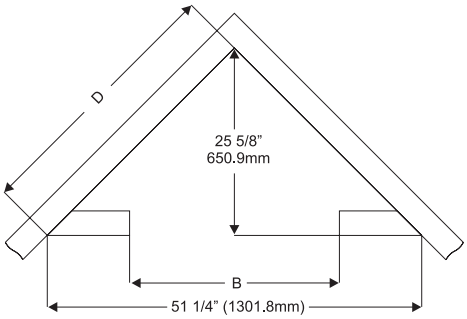


**Figure 4**

**Rough Opening for Elevated Installation**

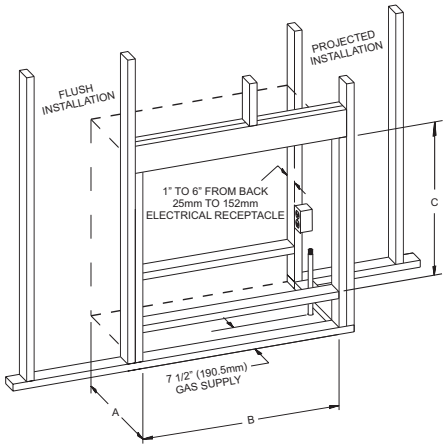


**Figure 5**

| | A | B | C | D |
|---|---|---|---|---|
| VFL20IN | 13 3/4" (349.3 mm) | 27 3/4" (704.9 mm) | 19 1/4" (489 mm) | 36 1/4" (920.8 mm) |
| VFL28IN | 16 3/4" (425.5 mm) | 30 1/2" (774.7 mm) | 22 1/2" (571.5 mm) | 36 1/4" (920.8 mm) |

# VFL20IN FIREPLACE WITH SURROUND DIMENSIONS

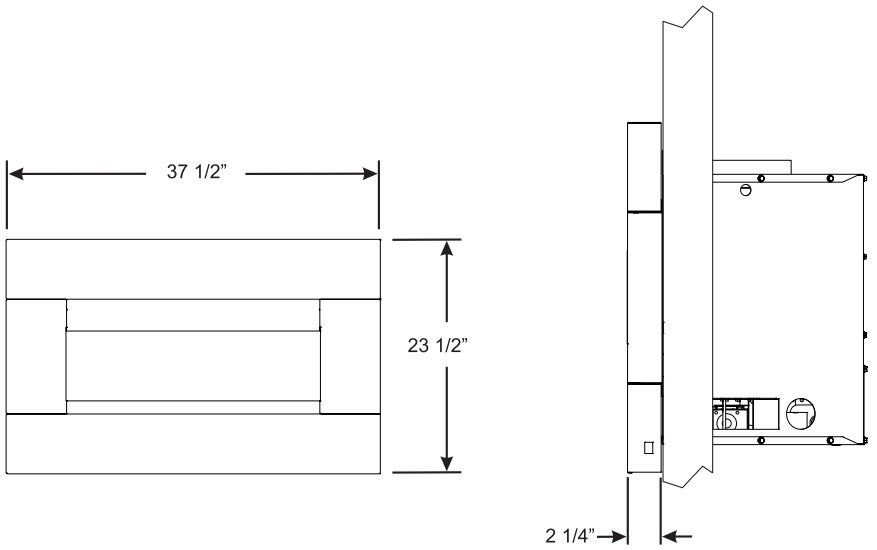


**DF20MBL**

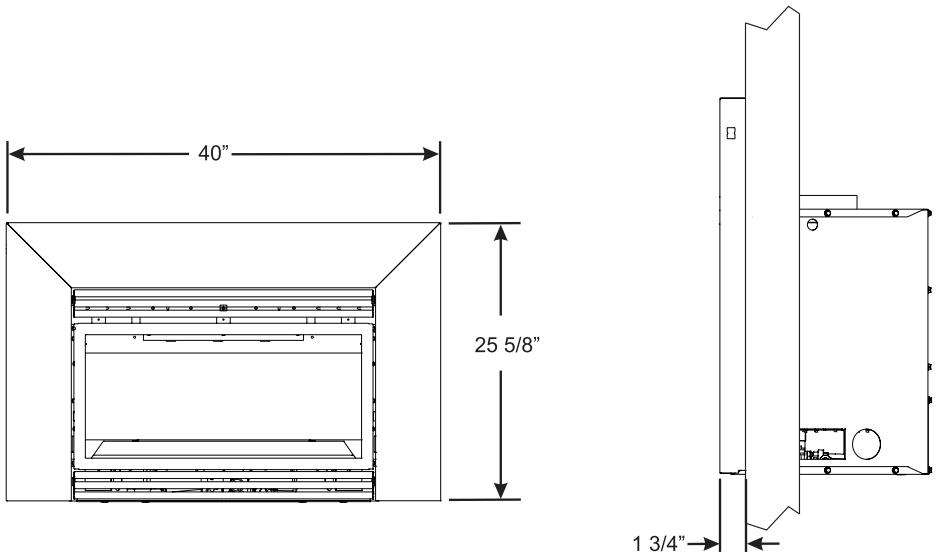


**DF20LBL**

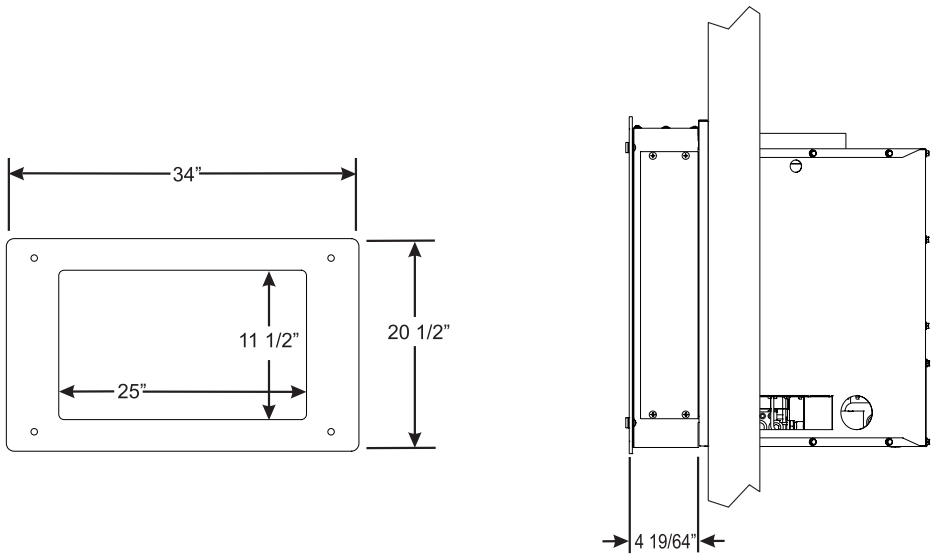


**DF20GBL**

# VFL28IN FIREPLACE WITH SURROUND DIMENSIONS

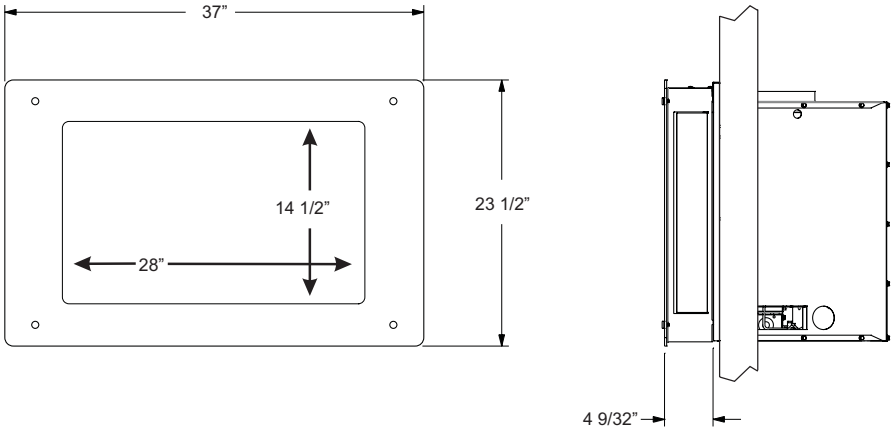


**DF28GBL**

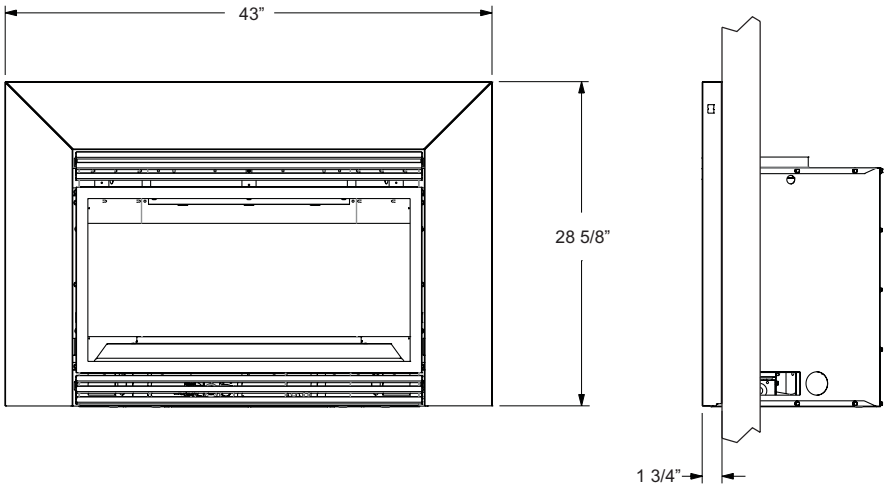


**DF28LBL**

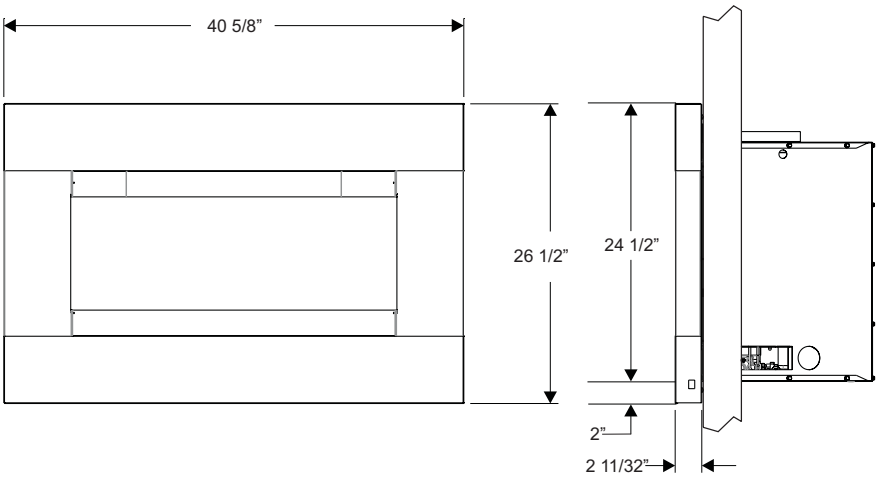


**DF28MBL**

# WATER VAPOR: A BY-PRODUCT OF UNVENTED ROOM HEATERS

Water vapor is a by-product of gas combustion. An unvented room heater produces approximately one ounce (30ml) of water for every 1,000 BTU's (.3KW's) of gas input per hour.

Unvented room heaters are recommended as supplemental heat (a room) rather than a primary heat source (an entire house). In most supplemental heat applications, the water vapor does not create a problem. In most applications, the water vapor enhances the low humidity atmosphere experienced during cold weather.

The following steps will help insure that water vapor does not become a problem.

1. Be sure the heater is sized properly for the application, including ample combustion air and circulation air.
2. If high humidity is experienced, a dehumidifier may be used to help lower the water vapor content of the air.
3. Do not use an unvented room heater as the primary heat source.

# PROVISIONS FOR ADEQUATE COMBUSTION & VENTILATION AIR

This heater shall not be installed in a confined space or unusually tight construction unless provisions are provided for adequate combustion and ventilation air.

**Installation in a Confined Space**

A confined space is an area with volume less than 50 cubic feet per 1,000 Btuh of the combined input rates of all appliances drawing combustion air from that space. Small areas such as equipment rooms are confined spaces. Furnaces installed in a confined space which supply heated air to areas outside the space must draw return air from outside the space through tightly sealed return air ducts. A confined space must have 2 openings into the space for combustion air. One opening must be within 12 inches of the ceiling and the other must be within 12 inches of the floor. The required sizing of these openings is determined by whether inside or outside air is used to support combustion, the method by which the air is brought to the space (vertical or horizontal duct) and by the total input rate of all appliances in the space.

**Unusually Tight Construction**

The air that leaks around doors and windows may provide enough fresh air for combustion and ventilation. However, in buildings of unusually tight construction, you must provide additional fresh air.

**Unusually tight construction is defined as construction where:**

a. Walls and ceilings exposed to the outside atmosphere have a continuous water vapor retarder with a rating of one perm or less with openings gasketed or sealed, and
b. Weather-stripping has been added on openable windows and doors, and
c. Caulking or sealants are applied to areas such as joints around window and door frames, between sole plates and floors, between wall-ceiling joints, between wall panels, at penetrations for plumbing, electrical, and gas lines, and at other openings.

If your home meets all of the three criteria above, you must provide additional fresh air. See **"Ventilation Air From Outdoors,"** page 14.

**Determining if You Have a Confined or Unconfined Space**

Use this worksheet to determine if you have a confined or unconfined space.

**Space:** Includes the room in which you will install heater plus any adjoining rooms with doorless passageways or ventilation grills between the rooms.

1. Determine the volume of the space (length x width x height).
   Length x Width x Height = _____ cu. ft. (volume of space)
   *Example:* Space size 16 ft. (length) x 10 ft. (width) x 8 ft. (ceiling height) = 1,280 cu. ft. (volume of space)
   If additional ventilation to adjoining room is supplied with grills or openings, add the volume of these rooms to the total volume of the space.
2. Divide the space volume by 50 cubic feet to determine the maximum BTU/Hr the space can support.
   _____ (volume of space) ÷ 50 cu. ft. = (maximum BTU/Hr the space can support)
   *Example:* 1,280 cu. ft. (volume of space) ÷ 50 cu. ft. = 25.6 or 25,600 (maximum BTU/Hr the space can support)
3. Add the BTU/Hr of all fuel burning appliances in the space.

| | | | |
|---|---|---|---|
| Vent-free heater | | _____ | BTU/Hr |
| Gas water heater | | _____ | BTU/Hr |
| Gas furnace | | _____ | BTU/Hr |
| Vented gas heater | | _____ | BTU/Hr |
| Gas fireplace logs | | _____ | BTU/Hr |
| Other gas appliances* | + | _____ | BTU/Hr |
| Total | = | _____ | BTU/Hr |

| | | | | |
|---|---|---|---|---|
| *Example:* | Vented gas heater | | 20,000 | BTU/Hr |
| | Vent-free heater | + | 18,000 | BTU/Hr |
| | Total | = | 38,000 | BTU/Hr |

*Do not include direct-vent gas appliances. Direct vent draws combustion air from the outdoors and vents to the outdoors.

4. Compare the maximum BTU/Hr the space can support with the actual amount of BTU/Hr used.
   _____ BTU/Hr (maximum the space can support)
   _____ BTU/Hr (actual amount of BTU/Hr used)
   *Example:*
   25,600 BTU/Hr (maximum the space can support)
   38,000 BTU/Hr (actual amount of BTU/Hr used)

**⚠ WARNING**

If the area in which the heater may be operated is smaller than that defined as an unconfined space or if the building is of unusually tight construction, provide adequate combustion and ventilation air by one of the methods described in the *National Fuel Gas Code, ANSI Z223.1/NFPA 54, Air for Combustion and Ventilation,* or applicable local codes.

The space in the above example is a confined space because the actual BTU/Hr used is more than the maximum BTU/HR the space can support. You must provide additional fresh air. Your options are as follows:

A. Rework worksheet, adding the space of an adjoining room. If the extra space provides an unconfined space, remove door to adjoining room or add ventilation grills between rooms. See **Ventilation Air From Inside Building.**
B. Vent room directly to the outdoors. See **Ventilation Air From Outdoors.**
C. Install a lower BTU/Hr heater, if lower BTU/Hr size makes room unconfined.

If the actual BTU/Hr used is less than the maximum BTU/Hr the space can support, the space is an unconfined space. You will need no additional fresh air ventilation.

**⚠ WARNING**

**You must provide additional ventilation air in a confined space.**

**Ventilation Air**

**Ventilation Air From Inside Building**

This fresh air would come from an adjoining unconfined space. When ventilating to an adjoining unconfined space, you must provide two permanent openings: one within 12" of the ceiling and one within 12" of the floor on the wall connecting the two spaces (see options 1 and 2, Figure 6). You can also remove door into adjoining room (see option 3, Figure 6). Each ventilation grill or opening shall have a minimum free area of one square inch per 1,000 BTUH of the total input rating of the gas equipment in the confined space.

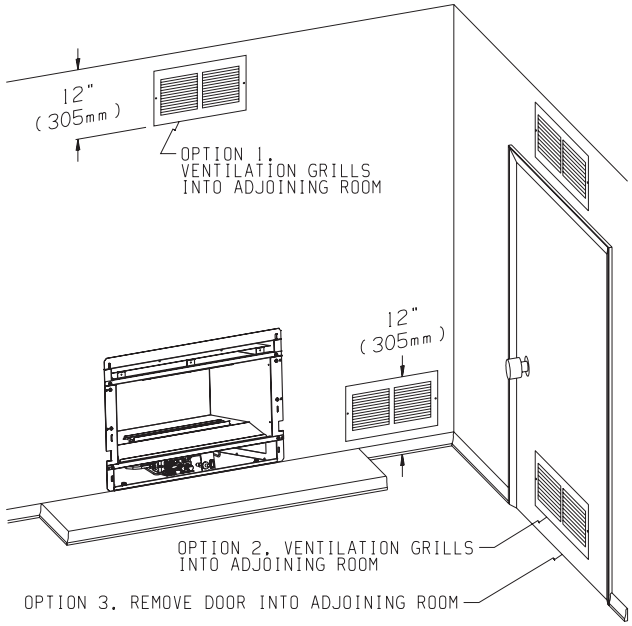


**Figure 6**

**⚠ WARNING**

**Rework worksheet, adding the space of the adjoining unconfined space. The combined spaces must have enough fresh air to supply all appliances in both spaces**.

**Ventilation Air From Outdoors**

Provide extra fresh air by using ventilation grills or ducts. You must provide two permanent openings: one within 12" of the ceiling and one with 12" of the floor. Connect these items directly to the outdoors or spaces open to the outdoors. These spaces include attics and crawl spaces. In most cases for direct communication with the outdoors or direct communication through a vertical duct a free area opening of one square inch per 4,000 BTU/Hr of heater input rating for each grill. If a horizontal duct is used, a grill free area or duct opening shall have a free area opening of one square inch per 2,000 BTU/Hr for each grill. Follow the *National Fuel Code ANSI Z223.1/NFPA54, Air for Combustion and Ventilation* for required size of ventilation grills or ducts.

*IMPORTANT:* Do not provide openings for inlet or outlet air into attic if attic has a thermostat-controlled power vent. Heated air entering the attic will activate the power vent.

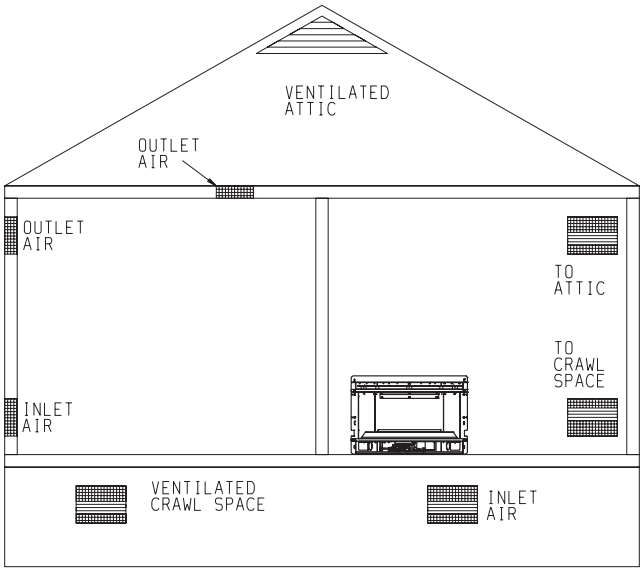


**Figure 7**

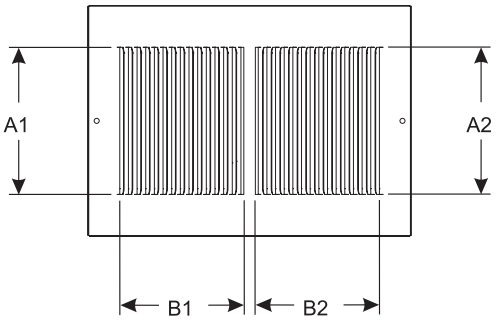


A1 x B1 = C1
A2 x B2 = C2
C1 + C2 = Sq. In. Required

**Example:** For a 30,000 BTU Heater, 1 sq in per 1,000 BTU equals 30 sq. in. of opening.

(A1) 5in$^2$ x (B1) 3in$^2$ = (C1) 15in$^2$
(A2) 5in$^2$ x (B2) 3in$^2$ = (C2) 15in$^2$
(C1) 15in$^2$ + (C2) 15in$^2$ = 30in$^2$

**Figure 8**

# GAS SUPPLY

The gas pipeline can be brought in through the right or left side of the appliance. The insert has a Flexline with shutoff valve located on the right side when facing the unit. **See Figures 9 and 10.** Consult the current National Fuel Gas Code, ANSI Z223.1 CAN/CGA-B149 (.1 or .2) installation code.

| Recommended Gas Pipe Diameter | | | | |
|---|---|---|---|---|
| **Pipe Length** | **Schedule 40 Pipe Inside Diameter** | | **Tubing, Type L Outside Diameter** | |
| | Nat. | L.P. | Nat. | L.P. |
| 0-10ft<br>0-3m | 1/2"<br>12.7mm | 3/8"<br>9.5mm | 1/2"<br>12.7mm | 3/8"<br>9.5mm |
| 11-40ft<br>4-12m | 1/2"<br>12.7mm | 1/2"<br>12.7mm | 5/8"<br>15.9mm | 1/2"<br>12.7mm |
| 41-100ft<br>13-30m | 1/2"<br>12.7mm | 1/2"<br>12.7mm | 3/4"<br>19mm | 1/2"<br>12.7mm |
| 101-150ft<br>31-46m | 3/4"<br>19mm | 1/2"<br>12.7mm | 7/8"<br>22.2mm | 3/4"<br>1.9 mm |

**⚠ CAUTION**

Never use plastic pipe. Check to confirm whether your local codes allow copper tubing or galvanized.

***Notice*:** Since some municipalities have additional local codes, it is always best to consult your local authority and installation code.

The use of the following gas connectors is recommended:

— ANS Z21.24 Appliance Connectors of Corrugated Metal Tubing and Fittings.

— ANS Z21.45 Assembled Flexible Appliance Connectors of Other Than All-Metal Construction

The above connectors may be used if acceptable by the authority having jurisdiction. The state of Massachusetts requires that a flexible appliance connector cannot exceed three feet in length.

**FLEXIBLE GAS LINE CONNECTION**

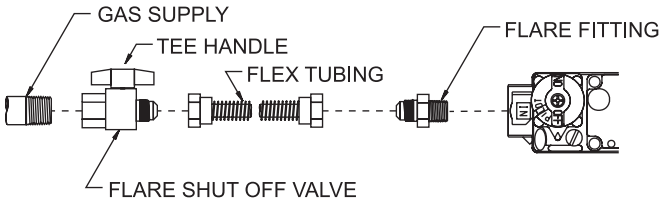


**Figure 9**

**Installing the Main Gas Cock**

Each appliance should have its own manual gas cock.

A manual main gas cock should be located in the vicinity of the unit. Where none exists, or where its size or location is not adequate, contact your local authorized installer for installation or relocation. Compounds used on threaded joints of gas piping shall be resistant to the action of liquefied petroleum gases. The gas lines must be checked for leaks by the installer. This should be done with a soap solution watching for bubbles on all exposed connections, and if unexposed, a pressure test should be made.

**Never use an exposed flame to check for leaks. Appliance must be disconnected from piping at inlet of control valve and pipe capped or plugged for pressure test. Never pressure test with appliance connected; control valve will sustain damage!**

***Notice*:** The millivolt gas controls are equipped with a captured screw type pressure test point, therefore it is not necessary to provide a 1/8" test point up stream of the control.

When using copper or flex connector use only approved fittings.

The appliance and it's individual shut off valve must be disconnected from supply piping system during any pressure testing of that system at test pressures in excess of 1/2 psig (3.5kPa).

The appliance must be isolated from the gas supply piping system by closing its individual manual shut off valve during any pressure testing of the gas supply piping system at test pressures equal to or less than 1/2 psig (3.5kPa).

**Attention!** If one of the procedures results in pressures in excess of 1/2 psig (14" w.c.) (3.5 kPa) on the fireplace gas valve, it will result in a hazardous condition.

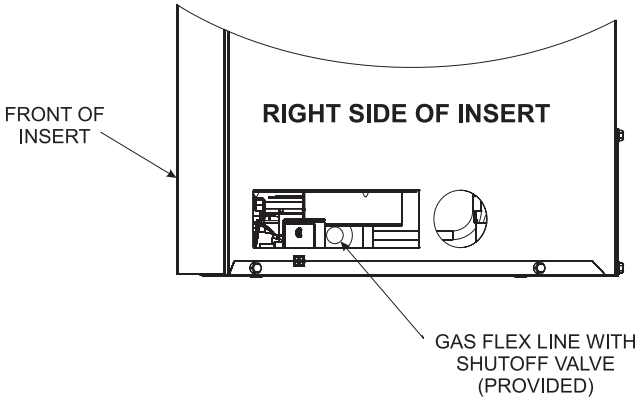


**Figure 10**

# GAS SUPPLY (continued)

**Checking Manifold Pressure**
**MILLIVOLT VALVES**

**Natural gas** will have a manifold pressure of approximately 3.5" w.c. for maximum input or 1.7" w.c. for minimum input at the pressure regulator outlet with the inlet pressure to the pressure regulator from a minimum of 4.5" w.c. for the purpose of input adjustment to a maximum of 10.5" w.c.

**Propane gas** will have a manifold pressure approximately 10.0"w.c. (2.49kPa) for maximum input or 4.9"w.c. for minimum input at the pressure regulator outlet with the inlet pressure to the pressure regulator from a minimum of 11.0"w.c. for the purpose of input adjustment to a maximum of 13.0"w.c.

**INTERMITTENT PILOT VALVES**

**Natural gas** will have a manifold pressure of approximately 3.5" w.c. at the pressure regulator outlet with the inlet pressure to the pressure regulator from a minimum of 7.0" w.c. for the purpose of input adjustment to a maximum of 10.5" w.c.

**Propane gas** will have a manifold pressure approximately 10.0"w.c. at the pressure regulator outlet with the inlet pressure to the pressure regulator from a minimum of 11.0"w.c. for the purpose of input adjustment to a maximum of 13.0"w.c.

A test gage connection is located downstream of the gas appliance pressure regulator for measuring gas pressure. The connection is a 1/8 inch N.P.T. plugged tapping.

**Millivolt Control Valve**
The valve regulator controls the burner pressure which should be checked at the pressure test point. Turn captured screw counter clockwise 2 or 3 turns and then place tubing to pressure gauge over test point (Use test point “A” closest to control knob). After taking pressure reading, **be sure and turn captured screw clockwise firmly to re-seal.** Do not over torque. Check for gas leaks.

# CLEARANCES

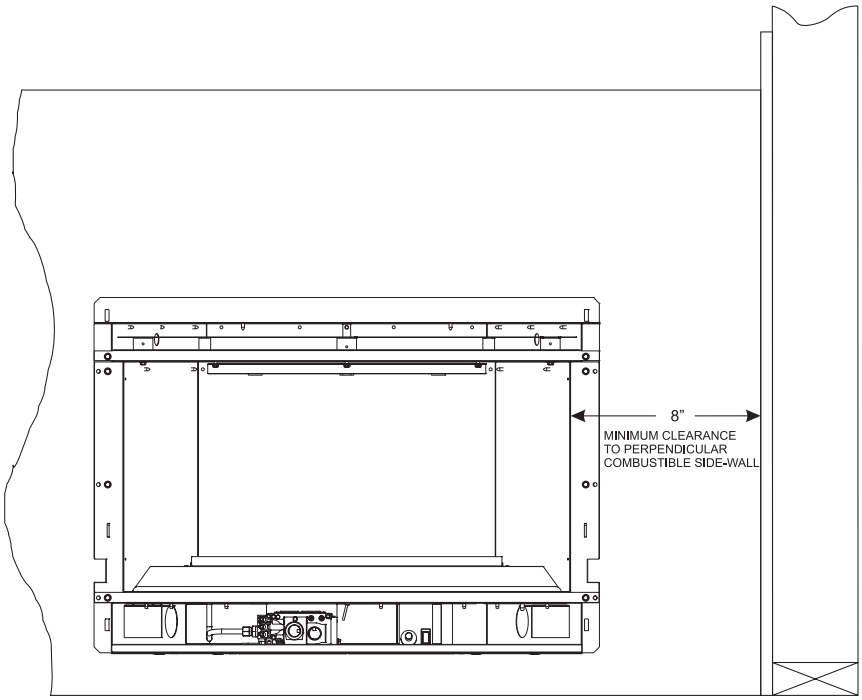


**Figure 11**

# CLEARANCES (continued)

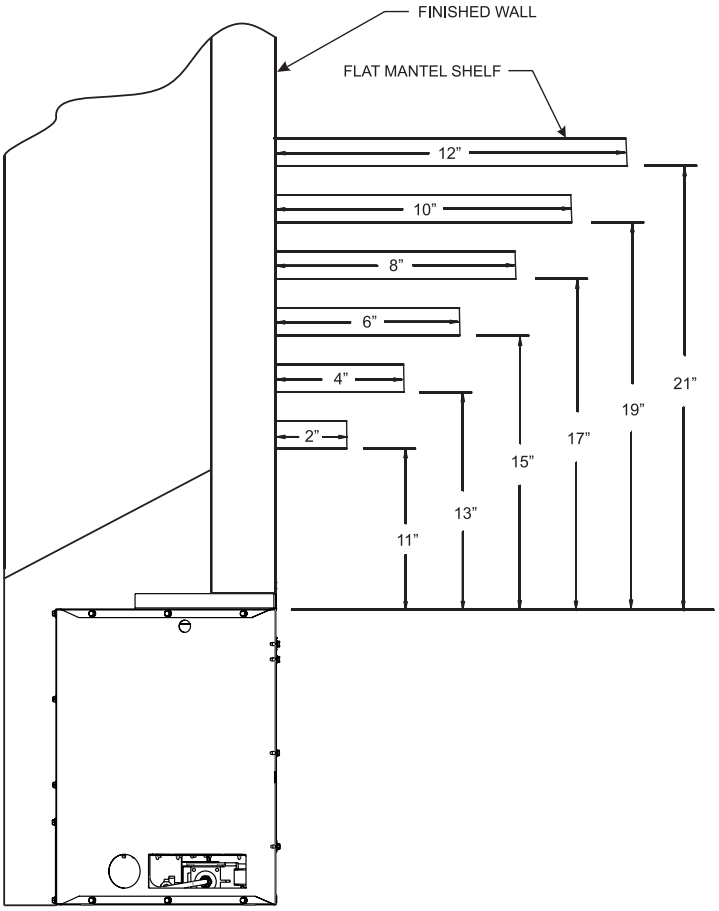


**VFL20 Series Figure 12**

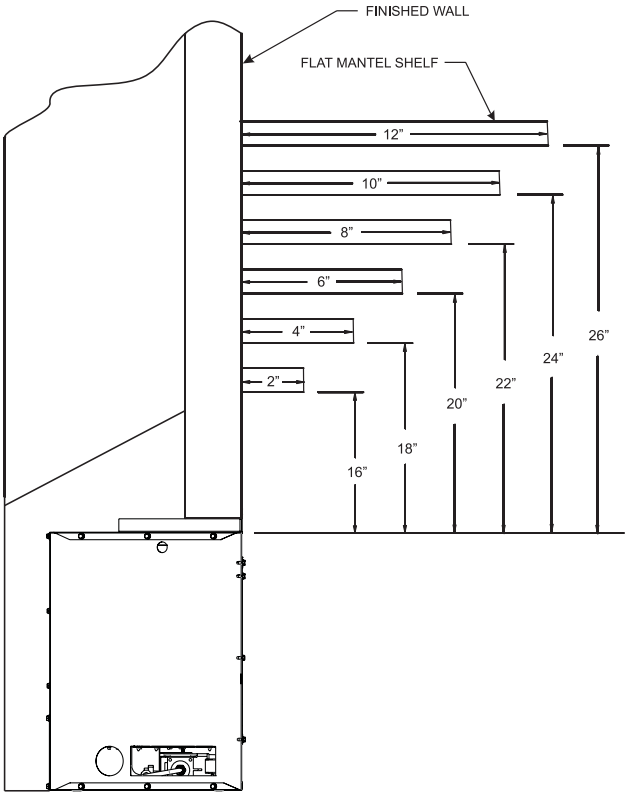


**VFL28 Series Figure 13**

# CLEARANCES (continued)

Figures 14 and 15 pertain to VFL(20,28)IN Series.

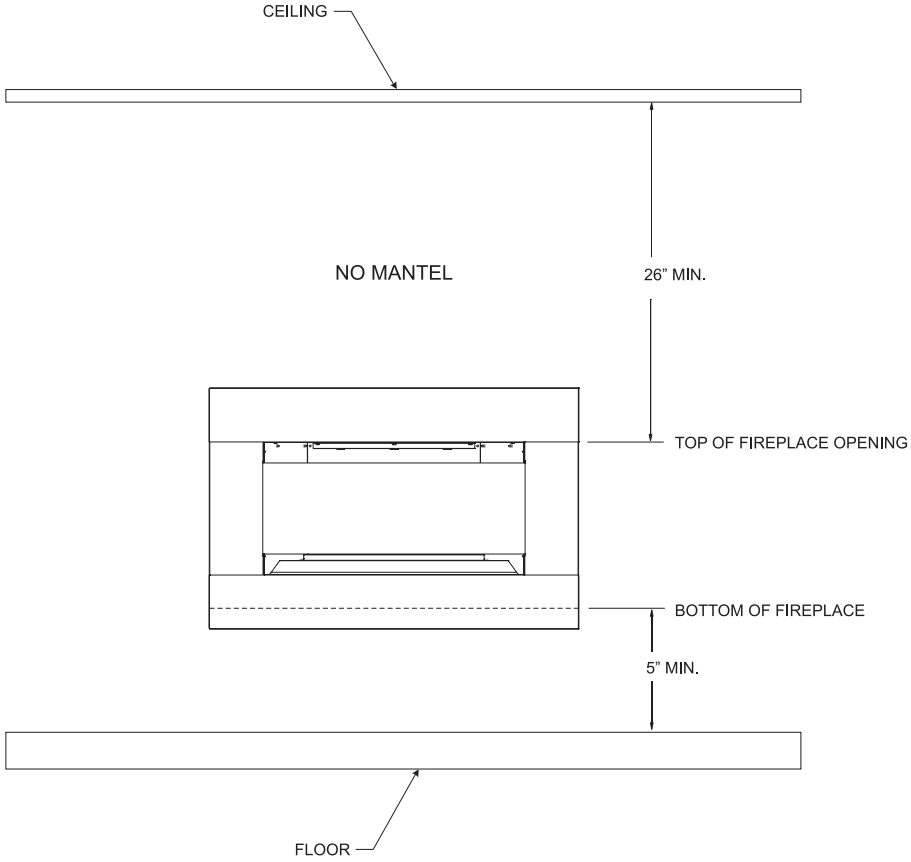


**Surround Clearances Figure 14**

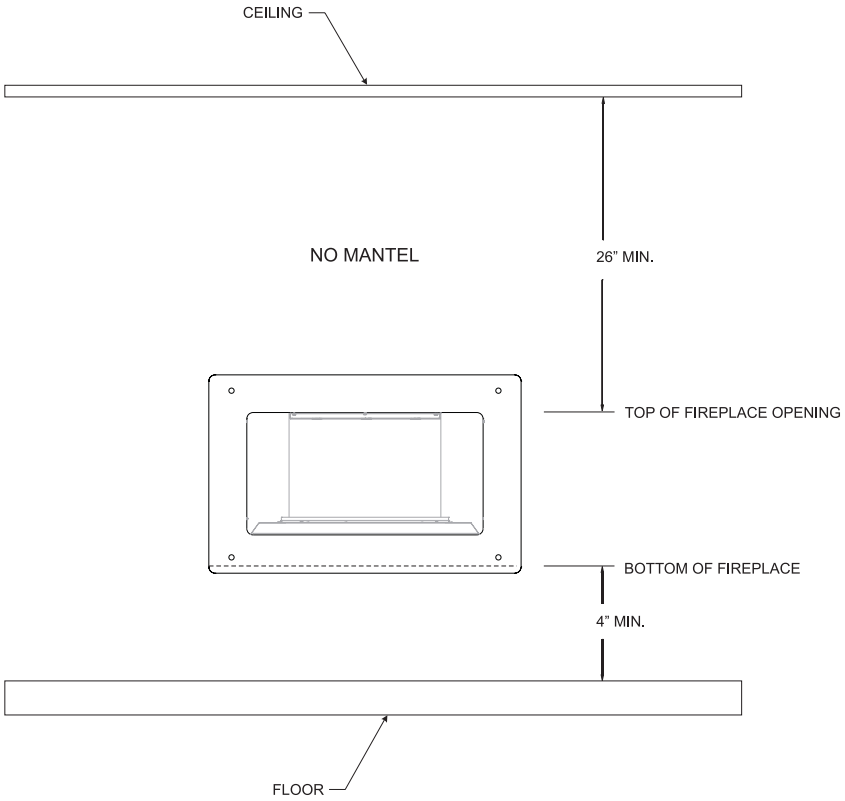


**Glass Front Clearances Figure 15**

# COMBUSTIBLE MATERIALS

**Combustible Material**

No greeting cards, stockings or ornamentation of any type should be placed on or attached to the fireplace. The flow of heat can ignite combustibles.

Do not attach combustible material to the mantel of your fireplace. This is a fire hazard.

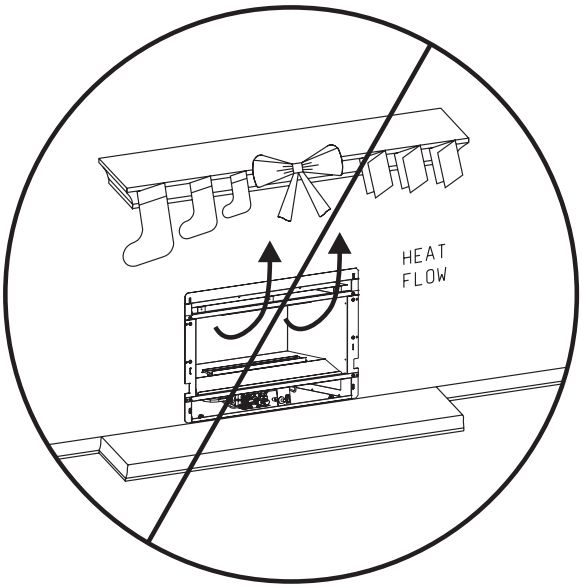


**Figure 16**

No greeting cards, stockings or ornamentation of any type should be placed on or attached to the fireplace. This is a heating appliance. The flow of heat can ignite combustibles.

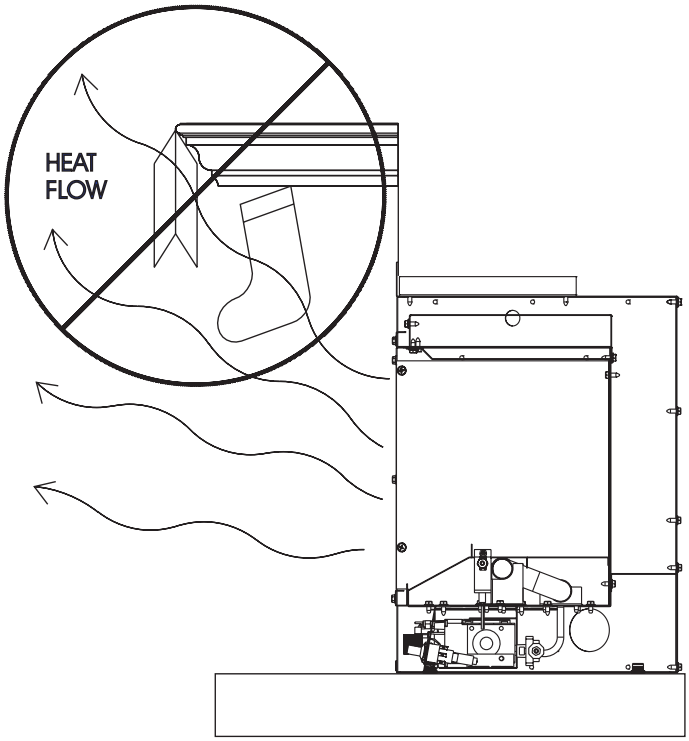


**Figure 17**

# ALTERNATE ON/OFF SWITCH INSTALLATION FOR MILLIVOLT SYSTEMS

**WIRING THE FIREPLACE**

**⚠ WARNING**

**Electrical wiring must be installed by a licensed electrician.**

**⚠ WARNING**

***DISCONNECT REMOTE CONTROLS IF YOU ARE ABSENT FOR EXTENDED TIME PERIODS. THIS WILL PREVENT ACCIDENTAL FIREPLACE OPERATION.***

**Installation of Alternate Surround Panel ON/OFF Switch on the millivolt control valve only.**

An ON/OFF switch and wire assembly are provided. They are included in the instruction packet.

Do not cut wire or insulation on metal edges.

***Notice*: Refer to surround panel installation section in the Installation Instructions supplied with the surround for additional information on attachment.**

**DF(20,28)MBL or DF(20,28)LBL Surround**

1. Find the coiled low voltage wire assembly and ON/OFF switch located in the instruction packet.
2. Attach the flag terminal ends to the “TH/TP” and “TH” terminals on the front terminal block of the gas valve. **See Figure 19.**
3. Run the low voltage alternate switch wires up the back of the right or left surround panel. Then secure the wires with wire clips provided. **See Figure 18.**

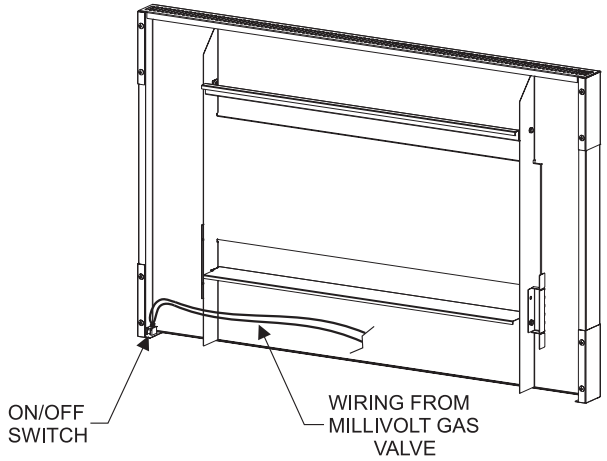


**Figure 18 (DF20MBL Shown)**

**Insert ON/OFF switch into side panel then attach wire assembly from valve terminals.**

4. Remove the switch knockout on the DF(20,28)BL surround, then install the ON/OFF switch into the switch bracket.
5. Connect the low voltage wires from the gas valve to the ON/OFF switch.

Note: The minimum clearance to the floor when using a DF(20,28)MBL surround is 2 inches. This clearance allows access to the ON/OFF switch.

6. Attach the surround panel assembly to the insert. Place the surround panel assembly against the face of the insert and align the lower retaining tabs with the notches on the insert sides. Lift the surround panel assembly slightly until the bottom return flange (top panel) is positioned over the top flange on the insert. This secures the surround panel assembly to the insert without screws.

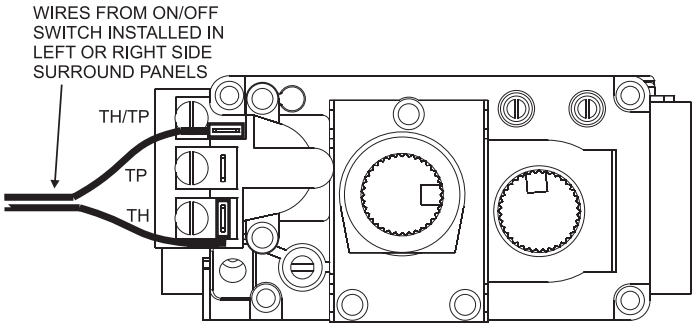


NOTE: TO OPERATE INSERT WITH SIDE PANEL ON/OFF SWITCH, BE SURE TO PLACE THE MAIN SWITCH (TO THE RIGHT SIDE OF GAS VALVE) TO “**OFF**” POSITION

**Figure 19**

# DECORATIVE ACCESSORY INSTALLATION

**⚠ WARNING**

**Failure to position the parts in accordance with the diagrams and instructions below or failure to use only parts specifically approved for use with this heater may result in property damage or personal injury.**

***Notice*: The Loft series burners may be operated with or without the Decorative accessory options. Follow the directions below should you choose to enhance your Loft burner with any one of the available decorative options.**

**DECORATIVE GLASS ACCESSORY PLACEMENT**

The Decorative Glass options are available in various colors and package sizes. Choose the size appropriate for your fireplace:
**VFL20IN** will accept 1 sq. ft. of decorative glass or rock.
**VFL28IN** will accept 1-1/2 sq. ft. of decorative glass or rock.
See Page 7.

**⚠ CAUTION**

**Use gloves and eye protection while applying the decorative glass.**

**INSTALLATION**

1. Application of the Decorative Glass should only be performed after the Loft burner has been fully installed, secured and tested for leaks. If operating the burner with a Remote Control, make sure all batteries are installed and that the Loft burner operates with the remote correctly.
3. To install the Decorative Glass, cut off a corner of the plastic bag and proceed to apply the glass to the rear shelf on the Loft burner (area behind the burner). Apply only enough glass to the Top Cover to cover the black metal surfaces. Do not allow the glass to fall around the burner tube. See Figures 20 to 21. Apply the remaining decorative glass to the front sloped surface of the Top Cover. Start by placing the glass along the front edge of the top cover, then gradually place the glass up the sloped top until completely covered. Do not allow the glass to fall around the burner tube. **See Figure 22.**

**⚠ CAUTION**

**Never place glass on top of or next to the burner.**

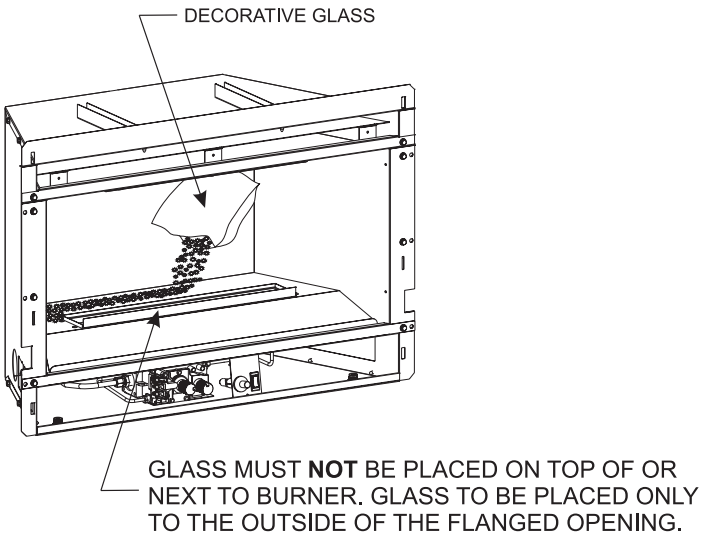


**Figure 20**

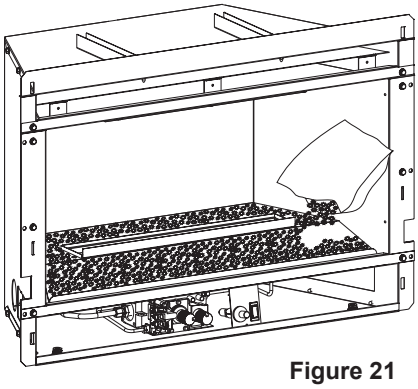

**Figure 21**

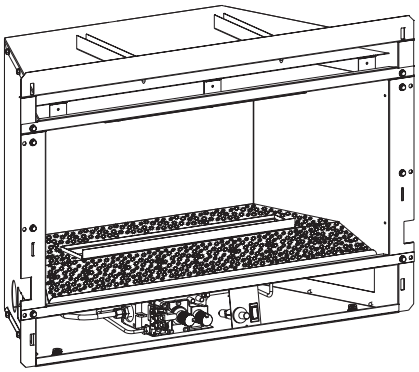

**Figure 22**

# OPERATION INSTRUCTIONS/FLAME APPEARANCE

Flames from the pilot (front center of burner) as well as the main flame should be visually checked as the fireplace is installed.

In normal operation at full rate after 10 to 15 minutes, the flame appearance should be sets of yellow flames.

***Notice*:** All flames will be random by design, flame height will go up and down.

Avoid any drafts that alter burner flame patterns. Do not allow fans to blow directly into fireplace. Do not place a blower inside the burner area of the firebox. Ceiling fans may create drafts that alter flame patterns. Sooting and improper burning will result.

During manufacturing, fabricating and shipping, various components of this appliance are treated with certain oils, films or bonding agents. These chemicals are not harmful, but may produce annoying smoke and smells as they are burned off during the initial operation of the appliance, possibly causing headaches or eye or lung irritation. This is a normal and temporary occurrence.

The initial break-in operation should last 2-3 hours with the burner at the highest setting. Provide maximum ventilation by opening windows or doors to allow odors to dissipate. Any odors remaining after this initial break-in will be slight and will disappear with continued use.

Once the break in operation has been completed, adjust the heater to the desired output and then replace the surround.

# MILLIVOLT CONTROL VALVE LIGHTING INSTRUCTIONS

## FOR YOUR SAFETY READ BEFORE LIGHTING

**⚠ WARNING: If you do not follow these instructions exactly, a fire or explosion may result causing property damage, personal injury or loss of life.**

**A. This appliance has a pilot which must be lighted by hand. When lighting the pilot, follow these instructions exactly.**

**B. BEFORE LIGHTING smell all around the appliance area for gas. Be sure to smell next to the floor because some gas is heavier than air and will settle on the floor.**

**WHAT TO DO IF YOU SMELL GAS**

- **Do not try to light any appliance.**
- **Do not touch any electrical switch; Do not use any phone in your building.**
- **Immediately call your gas supplier from a neighbor's phone. Follow the gas supplier's instructions.**
- **If you cannot reach your gas supplier, call the fire department.**

**C. Use only your hand to push in or turn the gas control knob. Never use tools. If the knob will not push in or turn by hand, don't try to repair it; call a qualified service technician. Force or attempted repair may result in a fire or explosion.**

**D. Do not use this appliance if any part has been under water. Immediately call a qualified service technician to inspect the appliance and to replace any part of the control system and any gas control which has been under water.**

## LIGHTING INSTRUCTIONS

1. STOP! Read the safety information label.
2. Open bottom louver assembly (if applicable).
3. Set REMOTE/OFF/ON switch to "OFF."
4. Turn off all electric power to the appliance (if applicable).
5. Push in gas control knob slightly and turn clockwise to "OFF." NOTE: Knob cannot be turned from "PILOT" to "OFF" unless knob is pushed in slightly. Do not force.
6. Wait ten minutes to clear out any gas. Then smell for gas, including near the floor. If you smell gas, STOP! Follow "B" in the safety information above. If you do not smell gas, go to the next step.
7. Find pilot - Follow metal tube from gas control. The pilot is in front of the burner on the right side.
8. Turn gas control knob counterclockwise to "PILOT."
9. Push in control knob all the way and hold in. Repeatedly push the Piezo Ignitor Button until the pilot is lit. Continue to hold the control knob in for about one minute after the pilot is lit. Release knob, and it will pop back up. Pilot should remain lit. If it goes out, repeat steps 5 through 9.
   - If knob does not pop up when released, STOP and IMMEDIATELY call a qualified service technician or gas supplier.
   - If the pilot will not stay lit after several tries, turn the gas control knob to "OFF" and call your service technician or gas supplier.
10. Turn gas control knob counterclockwise to "ON."
11. Set REMOTE/OFF/ON switch to desired setting.
12. Turn on all electric power to the appliance (if applicable).
13. Close bottom louver assembly (if applicable).

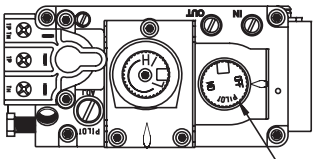


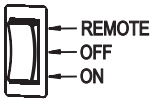


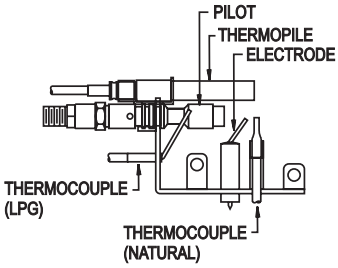


## TO TURN OFF GAS TO APPLIANCE

1. Open bottom louver assembly (if applicable).
2. Set REMOTE/OFF/ON switch to "OFF."
3. Turn off all electric power to the appliance if service is to be performed (if applicable).
4. Push in gas control knob slightly and turn clockwise to "OFF." Do not force.
5. Close bottom louver assembly (if applicable).

# MILLIVOLT CONTROL VALVE WIRING

Label all wires prior to disconnection when servicing controls. Wiring errors can cause improper and dangerous operation. Verify proper operation after servicing.

Millivolt thermopile is self powered, gas valve does not require 110 volts. Maximum length of 20 feet of 16 AWG to conductor wires is to be used with all optional switches.

Use the two leads (Red and Green) to attach optional components.

**Check 750 Millivolt System Operation**
Millivolt system and all individual components may be checked with a millivolt meter 0-1000 MV range.

**Remote Receiver**
Use the following steps to place the remote receiver adjacent to the gas valve.
**Attention:** The remote receiver bracket is not used in this installation.

1. The remote receiver can not be placed behind the gas valve and burner assembly.
2. When facing the appliance, the remote receiver must be placed to the right of the gas valve.

Install remote control receiver behind bottom louver.

Refer to remote control installation and operating instructions for more details on remote control.

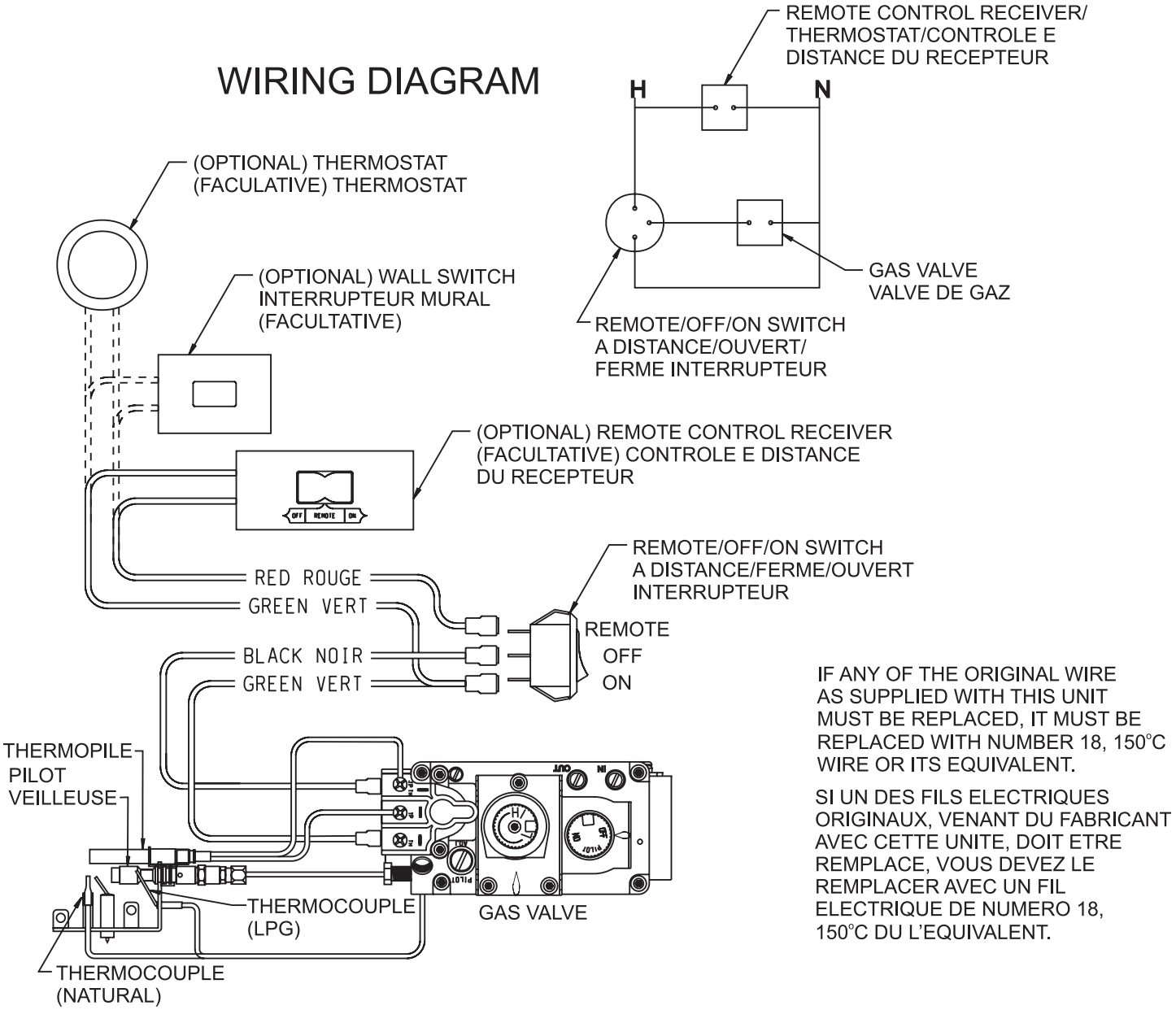


**Figure 23**

# MULTIFUNCTION REMOTE IP (MRIP) LIGHTING INSTRUCTIONS

## FOR YOUR SAFETY READ BEFORE LIGHTING

⚠ WARNING: If you do not follow these instructions exactly, a fire or explosion may result causing property damage, personal injury or loss of life.

A. This appliance has a pilot which must be lighted by hand. When lighting the pilot, follow these instructions exactly.

B. Before lighting smell all around the appliance area for gas. Be sure to smell next to the floor because some gas is heavier than air and will settle on the floor.

What To Do If You Smell Gas
- Do not try to light any appliance.
- Do not touch any electrical switch;
- Do not use any phone in your building.
- Immediately call your gas supplier from a neighbor's phone. Follow the gas supplier's instructions.
- If you cannot reach your gas supplier, call the fire department.

C. Use only your hand to push in or turn the gas control knob. Never use tools. If the knob will not push in or turn by hand, don't try to repair it; call a qualified service technician. Force or attempted repair may result in a fire or explosion.

D. Do not use this appliance if any part has been under water. Immediately call a qualified service technician to inspect the appliance and to replace any part of the control system and any gas control which has been under water.

## LIGHTING INSTRUCTIONS

1. STOP! Read the safety information above.
2. Turn OFF electric power to the appliance.
3. Remove front surround panel assembly or bottom louver if included.
4. Turn gas cock counterclockwise to “On” position.
5. Wait ten minutes to clear out any gas. Then smell for gas, including near the floor. If you smell gas, STOP! Follow “B” in the safety information above on this page. If you do not smell gas, go to the next step.
6. Turn ON electric power to the appliance.
7. Find pilot - Follow metal tube from gas control. The pilot is behind the burner on the right side.
8. Turn main flame to on. If the pilot does not light within 60 seconds, stop and go to Step 5.
9. Refer to remote control instructions for detailed information, control features, and operation. Note: There is a CPI/IP switch behind the right side panel that allows for a continuous standing pilot mode or an intermittent pilot mode. See appliance manual for location of this switch. If the pilot or burner does not stay lit (in the standing pilot mode), stop and immediately call a qualified service technician or gas supplier.
10. If the burner or pilot does not operate properly after several tries, turn the gas cock clockwise to “OFF” and call your service technician or gas supplier.
11. Replace the front surround assembly or close bottom louver assembly.
12. Operation of the gas valve is controlled by a manual on/off switch or a hand held remote control. Refer to remote instructions for detailed operation information.

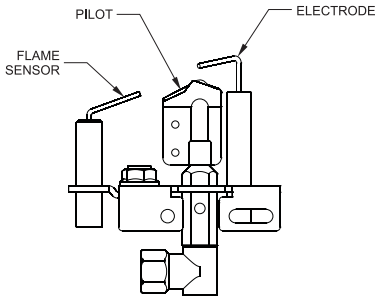


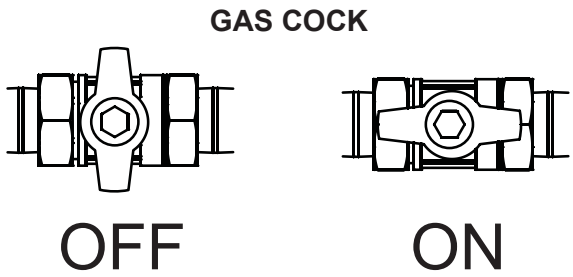


## TO TURN OFF GAS TO FIREPLACE

1. Set REMOTE/OFF/ON switch to OFF.
2. Turn off all electric power to the appliance if service is to be performed (if applicable).
3. Lower bottom louver assembly.
4. Push in gas control knob slightly and turn clockwise to "OFF." Do not force.
5. Close bottom louver assembly.

# MULTIFUNCTION REMOTE IP (MRIP) WIRING

**Note:** Valve Shown with Manual Hi/Lo.

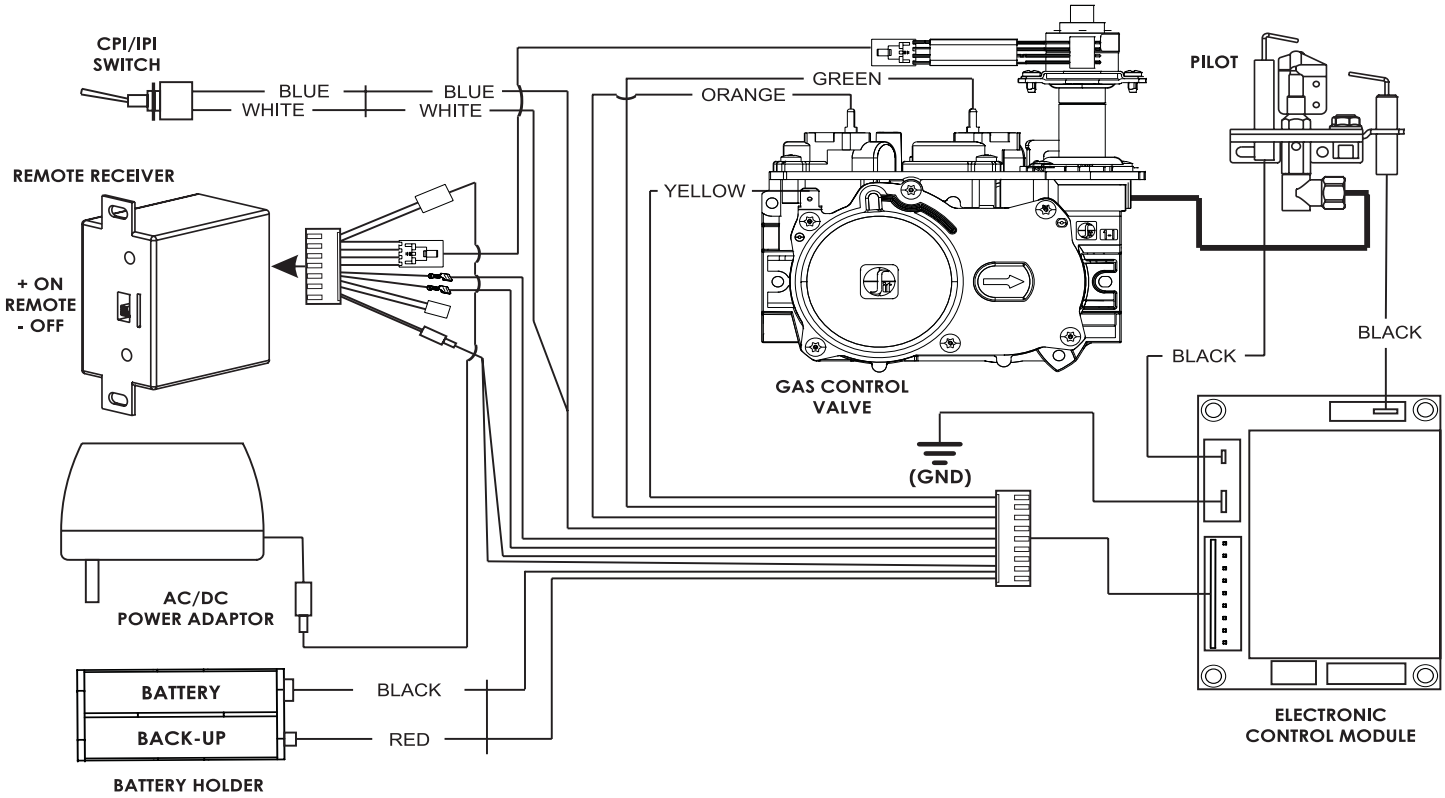


If any of the original wire as supplied with this unit must be replaced, it must be replaced with equivalent gauge and temperature rated wire.

This appliance is only for use with the type of gas indicated on the rating plate and may be installed in an aftermarket, permanently located, manufactured (mobile) home where not prohibited by local codes. This appliance is not convertible for use with other gases.

**⚠ WARNING**

Improper installation, adjustment, alteration, service or maintenance can cause property damage, personal injury or loss of life. Installation and service must be performed by a qualified installer, service agency or the gas supplier.

# MULTIFUNCTION REMOTE IP (MRIP) SPECIFICATIONS

| Technical Data | |
|---|---|
| **Remote Control** | |
| Supply voltage | 4.5 V (three 1.5 V AAA batteries) |
| Ambient temperature ratings | 0-50°C (32 - 122°F) |
| Radio frequency | 315 MHz |
| | |
| **Receiver** | |
| Supply voltage | 6.0 V (four 1.5 V AA batteries) |
| Ambient temperature ratings | 0-60°C (32 - 140°F) |
| Radio frequency | 315MHZ |

**⚠ WARNING**

THE TRANSMITTER AND RECEIVER ARE RADIO FREQUENCY DEVICES. PLACING THE RECEIVER IN OR NEAR METAL MAY SEVERELY REDUCE THE SIGNAL RANGE.

**ATTENTION**

- TURN “OFF” THE MAIN GAS SUPPLY OF THE APPLIANCE DURING INSTALLATION OR MAINTENANCE OF THE RECEIVER.
- PLACE THE RECEIVER’S 3 POSITION SLIDER SWITCH IN THE “OFF” POSITION DURING INSTALLATION OR MAINTENANCE.
- TURN “OFF” MAIN GAS SUPPLY TO THE APPLIANCE PRIOR TO REMOVING OR REINSERTING THE BATTERIES IN THE RECEIVER.

**⚠ WARNING**

**FIRE HAZARD. CAN CAUSE SEVERE INJURY OR DEATH.**
THE RECEIVER CAUSES IGNITION OF THE APPLIANCE. THE APPLIANCE CAN TURN ON SUDDENLY. KEEP AWAY FROM THE APPLIANCE BURNER WHEN OPERATING THE REMOTE SYSTEM OR ACTIVATING MANUAL BYPASS OF THE REMOTE SYSTEM.

**⚠ CAUTION**

**PROPERTY DAMAGE HAZARD.**
**EXCESSIVE HEAT CAN CAUSE PROPERTY DAMAGE.**
THE APPLIANCE CAN STAY LIT FOR MANY HOURS. TURN OFF THE APPLIANCE IF IT IS NOT GOING TO BE ATTENDED FOR ANY LENGTH OF TIME. ALWAYS PLACE THE TRANSMITTER WHERE CHILDREN CAN NOT REACH IT.

**5.25 VDC ELECTRONIC CONTROL VALVE**

The electronic control valve system includes the ability to switch the pilot from a standing pilot mode to an intermittent pilot mode.

- **IP Mode** - In the Intermittent Pilot mode, when the unit is turned ON, it will cause spark to the pilot, light the pilot, then allow the burner to light. When the unit is turned to OFF, both the burner and pilot will be OFF.
- **CPI Mode** - In the Continuous Pilot mode, the pilot remains ON continuously even when the burner is turned OFF.

Note: A small toggle switch is located on a bracket that is used to switch from IP (left position) to the CPI (right position). **See Figure 24.**

When the unit is turned to ON, the electrical current will energize a spark to the pilot igniter. Once the pilot sensor heats up (after a few seconds), the valve will be energized, allowing gas to flow to the burner.

1. Follow the SAFETY and LIGHTING INSTRUCTIONS for Intermittent Pilot controls found in this manual, and on labels found in the control compartment located in the lower cavity of the appliance.
2. During the operating season (or in power outage periods), it is recommended that the pilot remain in the CPI (standing pilot mode) to reduce cold start issues, and/or conserve battery backup power during a power outage.
3. The gas valve has inlet and outlet pressure taps as shown in **Figure 24.** Refer to pages 15 - 16 for gas pressure requirements.

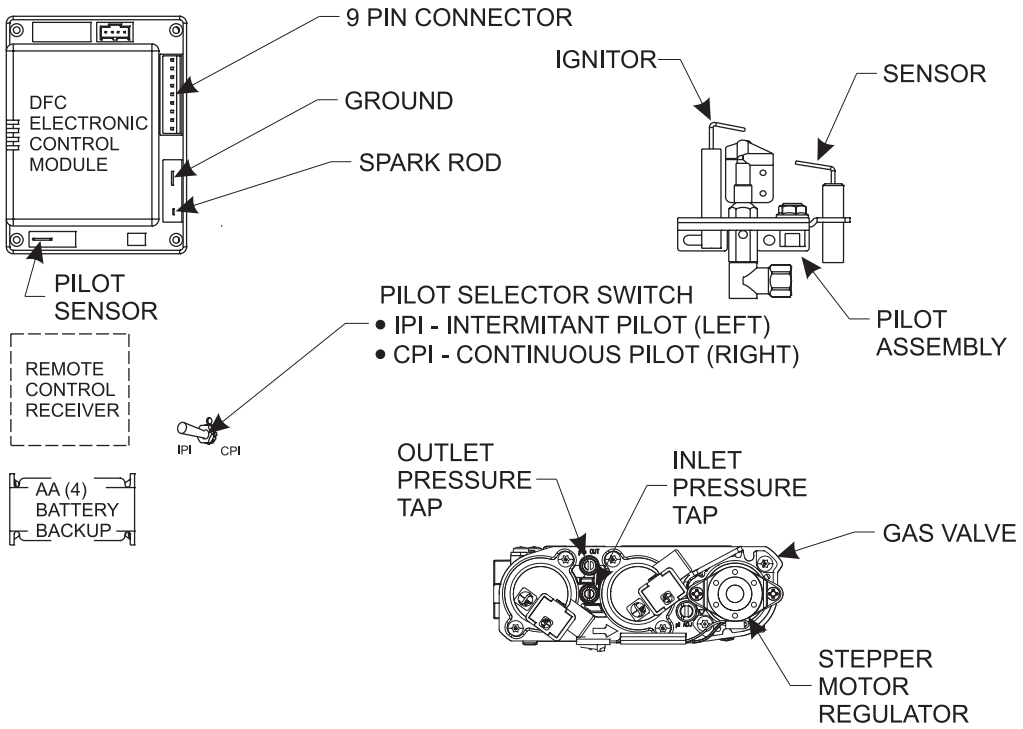


**Figure 24**

# MULTIFUNCTION REMOTE IP (MRIP) REMOTE INSTRUCTIONS

**TRANSMITTER (REMOTE CONTROL WITH LCD DISPLAY)**
The Proflame Transmitter uses a streamline design with a simple button layout and informative LCD display **See Figure 25.**
The Transmitter is powered by 3 AAA type batteries. A Mode Key is provided to Index between the features and a Thermostat Key is used to turn on/off or index through thermostat functions. **See Figures 25 and 26.**

**Figure 25 - Proflame Transmitter**

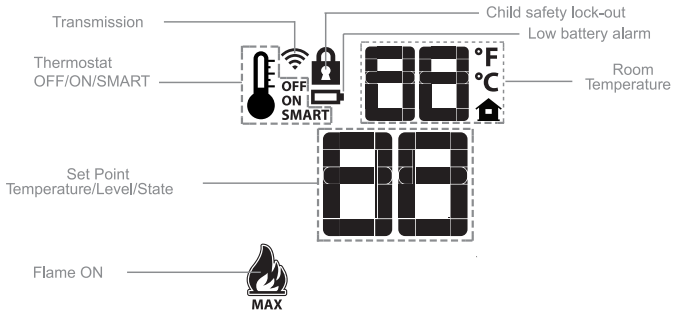


**Figure 26 - Transmitter LCD display**

**RECEIVER**
The Proflame Receiver connects directly to the gas valve and stepper motor with a wiring harness. **See Figure 27a and 27b.** The Receiver is powered by 4 AA type batteries. The Receiver accepts commands via radio frequency from the Transmitter to operate the appliance in accordance with the particular Proflame system configuration. The Receiver three position slider switch can be set to one of three positions: ON (Manual Override), Remote (Remote control) or Off.

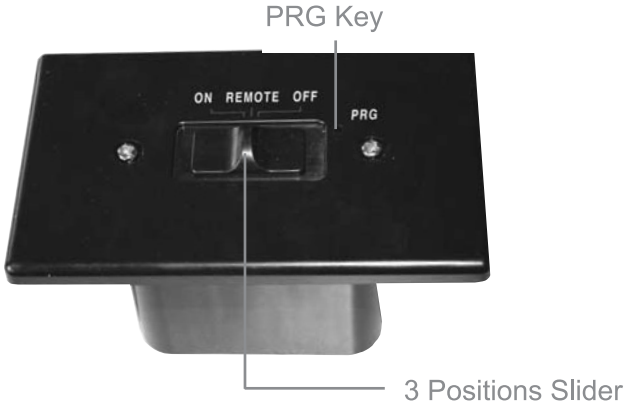


**Figure 27a - Proflame Receiver Body Front**

**Figure 27b - Proflame Receiver Body Back**

**OPERATING PROCEDURE**

**Initializing the System for the first time**

Install the 4 AA batteries into the receiver battery bay. Note the polarity of battery and insert into the battery bay as indicated on the Battery cover (+/-). Place the 3 position slider switch in the "Remote" position.

Using the end of a paper clip, or other similar object, insert the end of the paper clip into the hole marked "PRG" on the Receiver front cover. The Receiver will "beep" three times to indicate that it is ready to synchronize with a Transmitter. Install the 3 AAA type batteries in the Transmitter battery bay, located on the base of the Transmitter. With the batteries already installed in the Transmitter, push the On button. The Receiver will "beep" four times to indicate the Transmitter's command is accepted and sets to the particular code of that Transmitter. The system is now initialized.

**Temperature indication Display**

With the system in the "OFF" position, press the Thermostat Key and the Mode Key at the same time. Look at the LCD screen on the Transmitter to verify that a C or F is visible to the right of the Room Temperature display. **See Figures 28 and 29.**

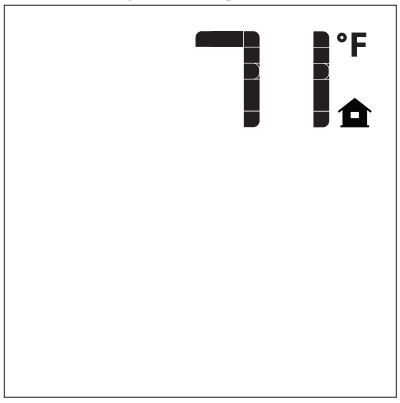


**Figure 28 - Fahrenheit**

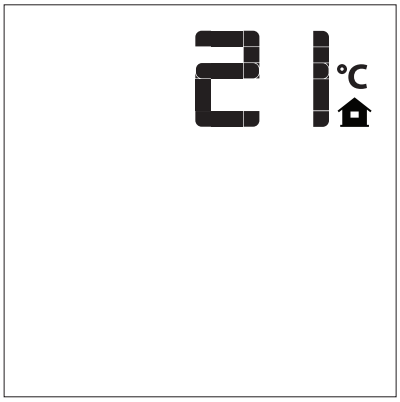


**Figure 29 - Celsius**

**Turn on the Appliance**

Press the ON/OFF Key on the Transmitter. The Transmitter display will show all active Icons on the screen. At the same time the Receiver connects the thermopile to the gas valve millivolt coil and the appliance main burner turns on. A single "beep" from the Receiver will confirm reception of the command.

**Turn off the Appliance**

Press the ON/OFF Key on the Transmitter. The Transmitter LCD display will only show the room temperature and Icon. **See Figure 30.** At the same time the Receiver disconnects the thermopile from the gas valve millivolt coil and the appliance burner turns off. A single "beep" from the Receiver confirms reception of the command.

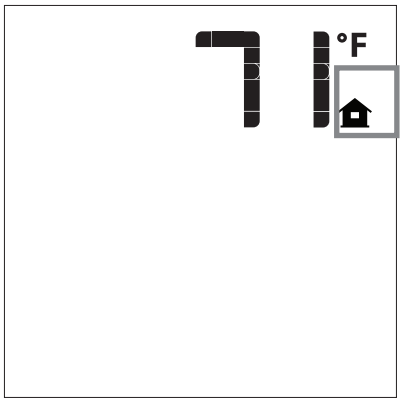


**Figure 30**

**Remote Flame Control**

The Proflame GTM has six flame levels. With the system on, and the flame level at the maximum in the appliance, pressing the Down Arrow Key once will reduce the flame height by one step until the flame is turned off. The Up Arrow Key will increase the flame height each time it is pressed. If the Up Arrow Key is pressed while the system is on but the flame is off, the flame will come on in the high position. **See Figures 31 to 34.** A single “beep” will confirm reception of the command.

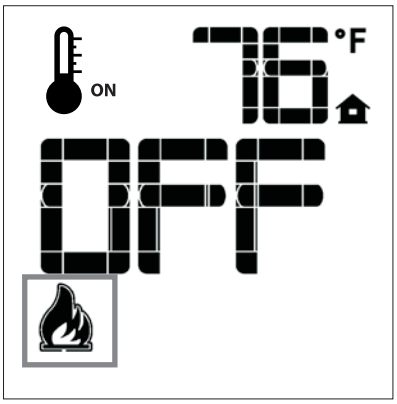


**Figure 31**

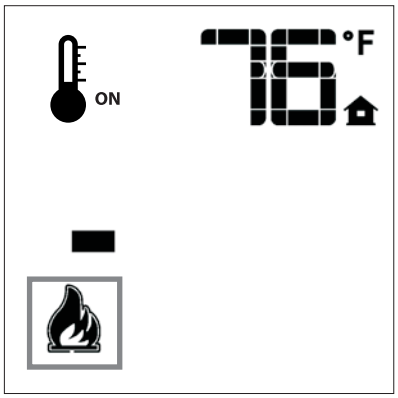


**Figure 32**

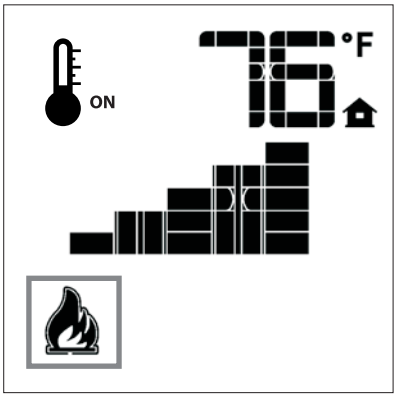


**Figure 33**

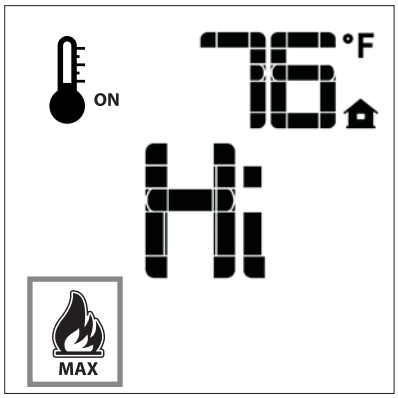


**Figure 34**

**ROOM THERMOSTAT ( Transmitter Operation)**

The Remote Control can operate as a room thermostat. The thermostat can be set to a desired temperature to control the comfort level in a room.

To activate this function, press the Thermostat Key. **See Figure 25.** The LCD display on the Transmitter will change to show that the room thermostat is “ON” and the set temperature is now displayed. **See Figures 35a and 35b.** To adjust the set temperature, press the Up or Down Arrow Keys until the desired set temperature is displayed on the LCD screen of the Transmitter.

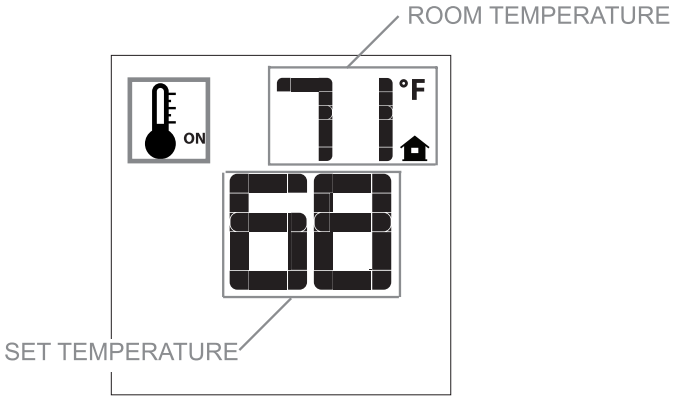


**Figure 35a**

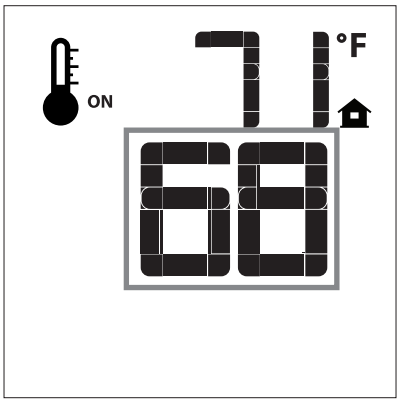


**Figure 35b**

**Smart Thermostat (Transmitter Operation)**

The Smart Thermostat function adjusts the flame height in accordance to the difference between the set point temperature and the actual room temperatures. As the room temperature gets closer to the set point the Smart Function will modulate the flame down.

To activate this function, press the Thermostat Key (**See Figure 25**) until the word "SMART" appears to the right of the temperature bulb graphic. **See Figure 36.** To adjust the set temperature, press the Up or Down arrow Keys until the desired set point temperature is displayed on the LCD screen of the Transmitter. **See Figure 37.**

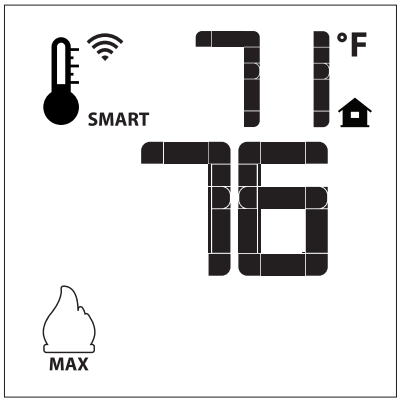


**Figure 36**

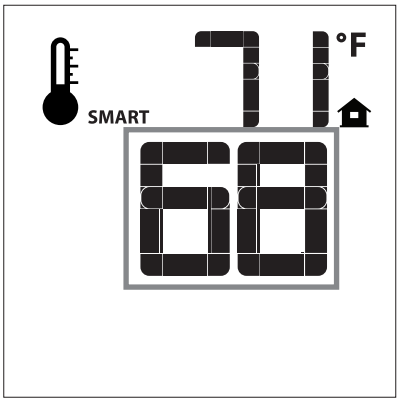


**Figure 37**

**KEY LOCK**

This function will lock the keys to avoid unsupervised operation.
To activate this function, press the MODE and the UP Arrow Key at the same time. **See Figure 38.**
To de-activate this function, press the MODE and the UP Arrow Key at the same time.

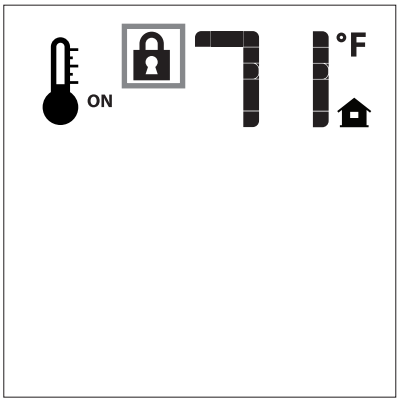


**Figure 38**

**LOW BATTERY POWER DETECTION**

**Transmitter**

The life span of the remote control batteries depends on various factors: quality of the batteries used, the number of ignitions of the appliance, the number of changes to the room thermostat set point, etc.
When the Transmitter batteries are low, a Battery Icon will appear on the LCD display of the Transmitter (**See Figure 39**) before all battery power is lost. When the batteries are replaced this Icon will disappear.

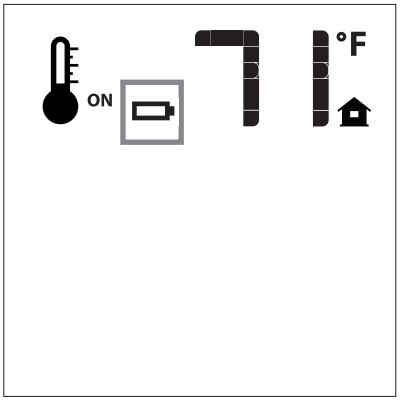


**Figure 39**

**Receiver**

The life span of the Receiver batteries depends on various factors: quality of the batteries used, the number of ignitions of the appliance, the number of changes to the room thermostat set point, etc.
When the Receiver batteries are low, No “beep” will be emitted from the Receiver when it receives an On/Off command from the Transmitter. This is an alert for a low battery condition for the Receiver. When the batteries are replaced the “beep” will be emitted from the Receiver when the ON/OFF Key is pressed (See Initialization of The System).

**MANUAL BYPASS OF THE REMOTE SYSTEM**

If the batteries of the Receiver or Transmitter are low or depleted, the appliance can be turned on manually by sliding the three position slider switch on the Receiver to the ON position.
This will bypass the remote control feature of the system and the appliance main burner will come on if the gas valve is in the “On” position.

# MULTIFUNCTION REMOTE IP (MRIP) TROUBLESHOOTING

**Brief Description of the Components**

The gas valve is fitted with a manual HI/LO knob to allow for manual modulation of the gas outlet pressure to the appliance burner. The controls are designed to be used with either LPG or Natural Gas and can be converted by use of an OEM supplied conversion kit.

The Digital Fireplace Control (DFC) is an automatic gas ignition system based on a single microcontroller core. This control manages all functions related to ignition, flame sensing and supervision for atmospheric applications.

The DFC can be set to provide continuous or intermittent ignition control sequences and flame monitoring with safety shutdown in case of failure.

The DFC is set up as a stand alone (AC powered system with battery back up. See IP Lighting Instructions on page 25 and Wiring Diagram on page 26.

**Troubleshooting**

Before proceeding with the procedures in the following troubleshooting table, verify that the power supply (AC/DC adapter) is present and that the batteries inside the receiver and/or optional battery pack are fresh and installed with correct polarity.

Make sure all the connections between the wire harnesses and system components are proper and positive.

Verify that the static inlet pressure meets the manufacturer's recommended inlet pressure. If necessary adjust the line pressure regulator.

If the recommended actions for the following troubleshooting chart do not help to address the problem consider replacing wiring harnesses.

**WARNING:**
**Any actions performed on the gas valve must be performed in accordance with this instruction manual. Likewise, any actions performed on the DFC or other system components must be done in accordance with the individual component instructions.**
**Replacement of components must be performed in accordance with this instructions manual.**

**If clicking occurs and the pilot does not light:**

1. Check that the gas is "on."
2. On initial start-up may take gas a while to get to the pilot.
3. Ensure that the wiring behind the receiver is properly attached.

# MULTIFUNCTION REMOTE IP (MRIP) TROUBLESHOOTING

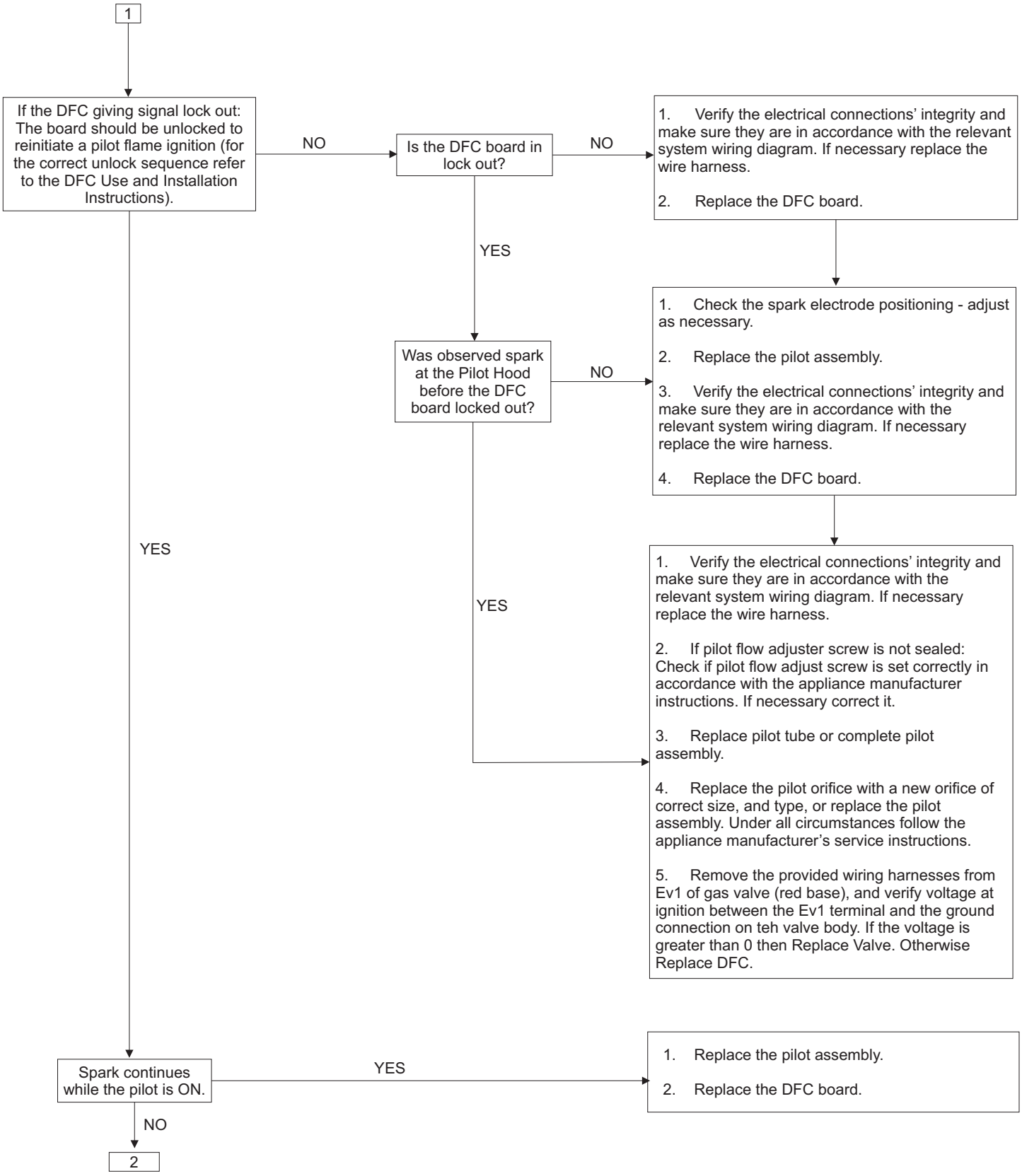

# MULTIFUNCTION REMOTE IP (MRIP) TROUBLESHOOTING

2

**Main burner lights when the pilot only should light.**

YES →

1. Replace DFC board.
2. Replace the gas valve.

NO ↓

**Pilot holds the flame?.**

NO →

1. Verify the pilot flame fully engulfs the tip of the sense electrode. If not replace the pilot assembly.
2. Replace the pilot assembly.
3. Carefully clean the electrical connections of the sense cable, and the DFC board sense cable connection.
4. Replace the sense cable, or the cable-sense electrode assembly, or the pilot assembly.
5. Verify the pilot is properly grounded.
6. Replace the pilot orifice with a new orifice of correct size, and type, or replace the pilot assembly.
7. If pilot flow adjuster screw is not sealed, correct it.

YES ↓

**Main burner ignites?**

NO →

1. Verify the electrical connections' integrity and make sure they are in accordance with the relevant system wiring diagram. If necessary replace the wire harness.
2. Check if the optional remote transmitter is in "thermostat" or "on" mode and verifyt there is a call for heat (f using a thermostat remote). Adjust the setting for heat.
3. Verify that the pilot hood is properly fitted and a pilot flame is directed to properly ignite the main appliance burner.
4. Replace the main burner orifice with a new orifice of correct size and type, or replace the pilot assembly. Under all circumstances follow the service instructions.
5. Remove the provided wiring harnesses from EV2 of gas valve (red base), and verify voltage at ignition between the EV1 terminal and the ground connection on the valve body.
   5.1 If the voltage is greater than 0 then Replace Valve.
   5.2 Or Replace DFC.
6. Check the pressure at the outlet pressure test point out according to the manufacturer's instruction. If not in accordance, replace the gas valve.

YES ↓

**Main burner remains ON**

NO →

1. Verify the electrical connections' integrity and make sure they are in accordance with the relevant system wiring diagram. If necessary replace the wire harness.
2. Check the pressure at the outlet pressure test point out according the manufacturer's instruction. If not in accordance replace the gas valve.
3. With the system in the OFF position, connect the voltmeter between the EV2 terminal (green base) on the valve, and the ground on the valve body.
   Turn the system ON, let pilot light, and observe the following voltage sequence: once the pilot flame is proved, the voltage on EV2 should spike to approx. 5 VdC for approx. 2 sec and then drop to approx. 0.6 VdC continuously.
   3.1 If the sequence is respected, replace the gas valve.
   3.2 If the sequence is not respected, replace the DFC board.

↓

**Main burner modulates properly?**

→

1. Replace the main burner orifice with a new orifice of correct size (partial blockage possible). Verify that the main burner flame modulates. If it does not modulate replace the gas valve.
2. Verify that the gas valve outlet pressure limits are in accordance with the manufacturer specifications. If not replace the gas valve.

**FOR STEPPER MOTOR VERSION**

3. Check for the proper electric connections, and inspect the stepper motor wiring for damage. If wiring is damaged, replace valve.
4. Replace transmitter.
5. Replace receiver.
6. Replace gas valve.

# MULTIFUNCTION REMOTE IP (MRIP) PILOT FLAME CHARACTERISTICS

**Figures 40 and 42** show a correct pilot flame pattern. The correct flame will be blue and will extend beyond the thermocouple. The flame will surround the thermocouple just below the tip. A slight yellow flame may occur where the pilot flame and main burner flame meet. **Figures 41 and 43** show an incorrect pilot flame pattern. The incorrect pilot flame is not touching the thermocouple. This will cause the thermocouple to cool. When the thermocouple cools, the heater will shut down.

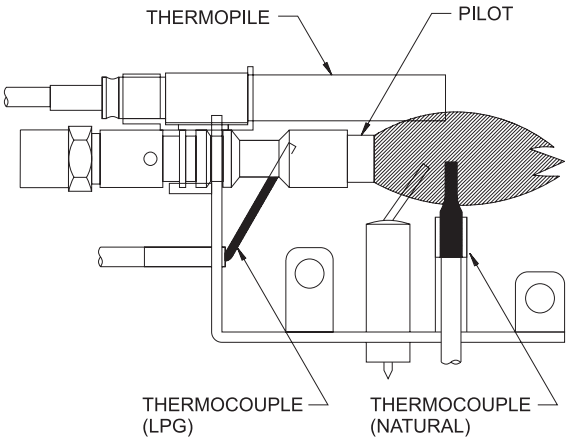


**Correct Pilot Flame Pattern for MILLIVOLT**
**Figure 40**

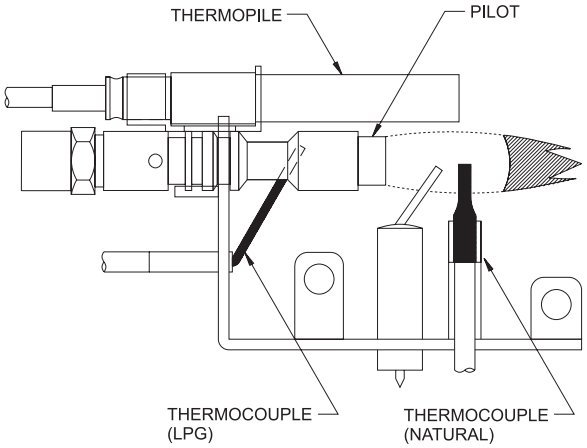


**Incorrect Pilot Flame Pattern for MILLIVOLT**
**Figure 41**

If pilot flame pattern is incorrect, as shown in **Figure 41:**

- See Millivolt Troubleshooting, page 39.

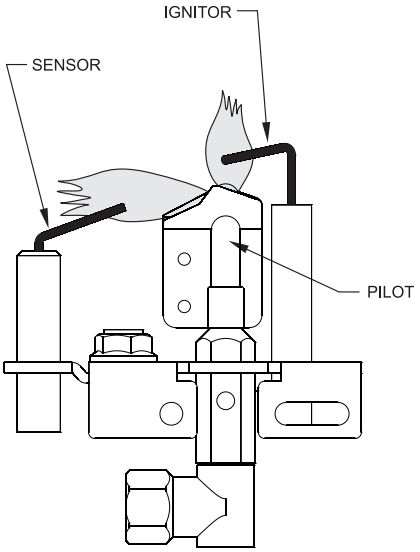


**Correct Pilot Flame Pattern for MRIP**
**Figure 42**

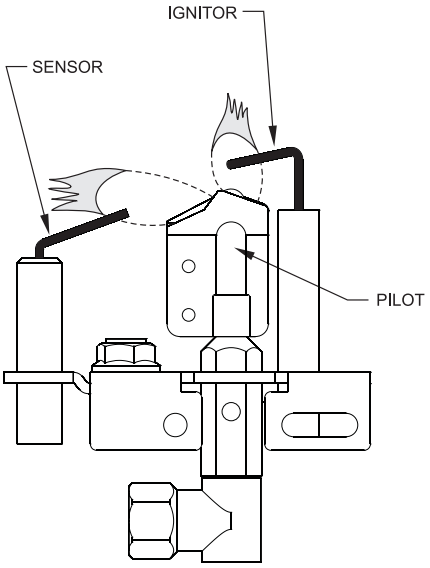


**Incorrect Pilot Flame Pattern for MRIP**
**Figure 43**

If pilot flame pattern is incorrect, as shown in **Figure 43:**

- See IP Troubleshooting, pages 34 - 36.

# MULTIFUNCTION REMOTE IP (MRIP) PILOT FLAME CHARACTERISTICS

**Cleaning and Pilot Maintenance**
**Oxygen Depletion Sensor Pilot**
When the pilot has a large yellow tip flame, clean the Oxygen Depletion Sensor as follows:

1. Clean the ODS pilot by loosening nut B from the pilot tubing. When this procedure is required, grasp nut A with an open end wrench.
2. Blow air pressure through the holes indicated by the arrows. This will blow out foreign materials such as dust, lint and spider webs. Tighten nut B also by grasping nut A.

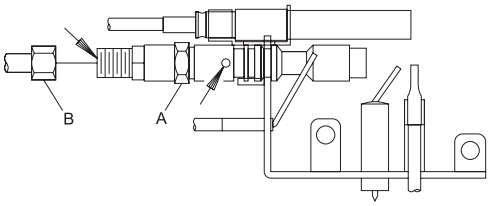


**Millivolt Pilot**
**Figure 44**

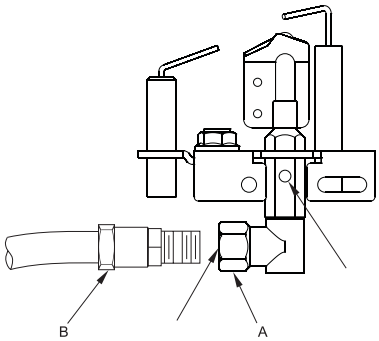


**MRIP Pilot**
**Figure 45**

**Warning:**
**Never use needles, wires, or similar cylindrical objects to clean the pilot to avoid damaging the calibrated ruby that controls the gas flow.**

# CLEANING AND SERVICING

**Annual inspection and cleaning by your dealer or qualified service technician is recommended to prevent malfunction and/or sooting.**

**TURN OFF HEATER AND ALLOW TO COOL BEFORE CLEANING.**
Remove any optional decorative covers or decorative glass material. Gloves are recommended.

**PERIODIC CLEANING - Refer to parts diagram for location of items discussed below.**

- Do not use cleaning fluid to clean any part of heater.
- Remove loose particles and dust from the burner, controls and grate.
- Inspect and clean burner air intake hole. Remove lint or particles with brush. Failure to keep air intake hole clean will result in sooting and poor combustion.

**ANNUAL CLEANING/INSPECTION - Refer to parts diagram for location of items discussed below.**

- Inspect and clean burner air intake hole. Remove lint or particles with vacuum or brush. Failure to keep air intake hole clean will result in sooting and poor combustion.
- Inspect and clean all burner ports.
- Inspect ODS pilot for operation and accumulation of lint at air intake holes.
- Verify flame pattern for proper operation.
- Verify smooth and responsive ignition of main burner.

# TROUBLESHOOTING
# SYMPTOMS, POSSIBLE CAUSES AND CORRECTIONS

1. **When ignitor button is pressed, there is no spark at ODS/ pilot.**
   a. Ignitor electrode positioned wrong - Replace pilot.
   b. Ignitor electrode is broken - Replace pilot.
   c. Ignitor electrode not connected to ignitor cable - Reconnect ignitor cable.
   d. Ignitor cable pinched or wet. Keep ignitor cable dry - Free ignitor cable if pinched by any metal or tubing.
   e. Broken ignitor cable - Replace ignitor cable.
   f. Bad piezo ignitor - Replace piezo ignitor.
2. **Appliance produces unwanted odors.**
   a. Appliance burning vapors from paint, hair spray, glues, etc. - Ventilate room. Stop using odor causing products while heater is running.
   b. Gas leak - Locate and correct all leaks.
3. **Appliance shuts off during use. (Pilot and main burner are off.)**
   a. Not enough fresh air is available for ODS/pilot to operate - Open window and/or door for ventilation.
   b. Low line pressure - Contact local gas company.
   c. ODS/pilot is partially clogged - Clean ODS/pilot.
   d. Defective thermocouple - Replace pilot.
4. **Appliance shuts off during use. (Pilot stays on.)**
   a. Low line pressure - Check line pressure to the valve.
   b. Defective thermopile - Check pilot flame, check wire connections, output should be a minimum of 325 millivolts across. TH/TP and TP terminals with REMOTE/OFF/ON switch off.
5. **Gas odor even when control knob is in OFF position.**
   a. Gas leak - Locate and correct all leaks.
   b. Control valve defective - Replace control valve.
6. **When ignitor button is pressed, there is spark at ODS/pilot, but no ignition.**
   a. Gas supply turned off or manual shutoff valve closed - Turn on gas supply or open manual shutoff valve.
   b. Control knob not in PILOT position - Turn control knob to PILOT position.
   c. Control knob not pressed in while in PILOT position - Press in control knob while in PILOT position.
   d. Air in gas lines when installed - Continue holding down control knob. Repeat igniting operation until air is removed.
   e. ODS/pilot is clogged - Replace ODS/pilot assembly or get it serviced.
   f. Gas regulator setting is not correct - Replace gas regulator.
7. **ODS/pilot lights but flame goes out when control knob is released.**
   a. Control knob not fully pressed in - Press in control knob fully.
   b. Control knob not pressed in long enough - After ODS/pilot lights, keep control knob pressed in 30 seconds.
   c. Manual Shutoff valve not fully open - Fully open manual shutoff valve.
   d. Thermocouple connection loose at control valve - Hand tighten until snug, then tighten 1/4 turn more.
   e. Pilot flame not touching thermocouple, which allows thermocouple to cool, causing pilot flame to go out. This problem could be caused by either low gas pressure or dirty or partially clogged ODS/pilot - Contact local gas company.
   f. Thermocouple damaged - Replace thermocouple.
   g. Control valve damaged - Replace control valve.
8. **Burner does not light after ODS/pilot is lit.**
   a. Burner orifice clogged - Clean burner or replace main burner orifice.
   b. Burner orifice diameter is too small - Replace burner orifice.
   c. Inlet gas pressure is too low - Contact qualified service person.
9. **If burning at main burner orifice occurs (a loud, roaring blow torch noise).**
   a. You must turn off burner assembly and contact a qualified service person.
   b. Manifold pressure is too low - Contact local gas company.
   c. Burner orifice clogged - Clean burner or replace burner orifice.
10. **Heater produces a whistling noise when main burner is lit.**
    a. Turning control knob to HIGH position when main burner is cold - Turn control knob to LOW position and let warm up for a minute (does not apply to 10k BTU models)
    b. Air in gas line - Operate burner until air is removed from line. Have gas line checked by local gas company.
    c. Dirty or partially clogged burner orifice - Clean burner or replace burner orifice.

**If the gas quality is bad, your pilot may not stay lit, the burners may produce soot and the heater may backfire when lit. If the gas quality or pressure is low, contact your local gas supplier immediately.**

# VFL20IN PARTS LIST

| INDEX NO | PART NO. VFL20IN3 | VFL20IN3 (10,000 BTU) | VFL20IN9 | DESCRIPTION |
|---|---|---|---|---|
| 1 | 27546BL | 27546BL | 27546BL | FIREBOX BAFFLE |
| 2 | 27406 | 27406 | 27406 | BURNER ASSEMBLY COVER |
| 3 | 28056 | 28056 | 31251 | FIREBOX BOTTOM - NAT |
| 3 | 28056 | 28056 | 31952 | FIREBOX BOTTOM - LP |
| 4 | 28055 | 28055 | 31669 | BLOWER SHIELD |
| 5 | 27085 | 27085 | 27085 | BURNER SUPPORT |
| 6 | R7624 | R7624 | R7624 | AIR SHUTTER |
| 7 | R7572 | R7572 | R7572 | JAMB NUT 1/4"-18 NPS |
| 8 | 27086 | 27086 | 27086 | BURNER END SUPPORT |
| 9 | P288 | P214 | P288 | ORIFICE - NAT |
| 9 | P182 | P193 | P182 | ORIFICE - LP |
| 10 | P212 | P212 | P212 | ORIFICE FITTING |
| 11 | R10410 | R10477 | R10410 | TUBE BURNER |
| 12 | R3623 | R3623 | R11327 | PILOT - LP |
| 12 | R3624 | R3624 | R11328 | PILOT - NAT |
| 13 | 27147 | 27147 | 31284 | TUBING ASSEMBLY - INLET |
| 14 | 27093 | 27093 | 31286 | TUBING ASSEMBLY - REGULATOR TO PILOT - NAT |
| 15 | R7063 | R7063 | R7063 | PILOT REGULATOR - NAT |
| 16 | 27094 | 27094 | 31285 | TUBING ASSEMBLY - VALVE TO REGULATOR - NAT |
| 17 | 27092 | 27092 | 31287 | TUBING ASSEMBLY - PILOT - LP |
| 18 | 26161 | 26161 | 29400 | VALVE BRACKET |
| 19 | R3625 | R9369 | R11234 | VALVE - LPG |
| 19 | R3626 | R9368 | R11233 | VALVE - NAT |
| 20 | - | - | R1978 | PILOT TUBE FITTING |
| 22 | 26162 | 26162 | - | PIEZO BRACKET |
| 23 | R3436 | R3436 | - | REMOTE OFF/ON SWITCH |
| 24 | R9760 | R9760 | - | PIEZO IGNITOR |
| 25 | 27223 | 27223 | 31249 | PILOT BRACKET - NAT |
| 25 | 27223 | 27223 | 31953 | PILOT BRACKET - LP |
| 26 | - | - | R11127 | CONTROL BOARD, PROFLAME |
| 27 | - | - | R11236 | REMOTE |
| 28 | - | - | R11235 | RECEIVER |
| 29 | - | - | R11128 | POWER ADAPTOR, 7.0 VDC |
| 30 | - | - | R11122 | BATTERY HOLDER, AA WITH SNAP-ON |
| 31 | - | - | R11123 | WIRE HARNESS, PROFLAME DFC |
| 32 | - | - | R11237 | WIRE HARNESS, RECEIVER |
| 33 | - | - | 29382 | MODULE TRAY |
| 34 | - | - | R2423 | CONNECTOR |
| 35 | - | - | 31670 | PILOT SHIELD |
| 36 | - | - | R11597 | FERRULE, SLEEVE |
| 37 | - | - | R11598 | NUT, INVERTED |
| N/S | R5668 | R5668 | R11333 | IGNITOR WIRE |
| N/S | R10947 | R10947 | - | REMOTE/OFF/ON HARNESS |
| N/S | - | - | R11332 | SENSOR WIRE - 24" |

N/S - Not Shown

# VFL28IN PARTS LIST

| INDEX NO | PART NO VFL28IN3 | PART NO VFL28IN9 | DESCRIPTION |
|---|---|---|---|
| 1 | 27559BL | 27559BL | FIREBOX BAFFLE |
| 2 | 27571 | 27571 | BURNER ASSEMBLY COVER |
| 3 | 27554 | 31345 | FIREBOX BOTTOM |
| 4 | 28055 | 31669 | BLOWER SHIELD |
| 5 | 27085 | 27085 | BURNER SUPPORT |
| 6 | R7624 | R7624 | AIR SHUTTER |
| 7 | R7572 | R7572 | JAMB NUT 1/4"-18 NPS |
| 8 | 27086 | 27086 | BURNER END SUPPORT |
| 9 | P257 | P257 | ORIFICE - NAT |
| 9 | P182 | P182 | ORIFICE - LP |
| 10 | P212 | P212 | ORIFICE FITTING |
| 11 | R10734 | R10734 | TUBE BURNER |
| 12 | R3623 | R11327 | PILOT - LP |
| 12 | R3624 | R11328 | PILOT - NAT |
| 13 | 27147 | 31284 | TUBING ASSEMBLY - INLET |
| 14 | 27093 | 31286 | TUBING ASSEMBLY - REGULATOR TO PILOT - NAT |
| 15 | R7063 | R7063 | PILOT REGULATOR - NAT |
| 16 | 27094 | 31285 | TUBING ASSEMBLY - VALVE TO REGULATOR - NAT |
| 17 | 27092 | 31287 | TUBING ASSEMBLY - PILOT - LP |
| 18 | 26161 | 29400 | VALVE BRACKET |
| 19 | R3625 | R11234 | VALVE - LPG |
| 19 | R3626 | R11233 | VALVE - NAT |
| 20 | - | R1978 | PILOT TUBE FITTING |
| 22 | 26162 | - | PIEZO BRACKET |
| 23 | R3436 | - | REMOTE OFF/ON SWITCH |
| 24 | R9760 | - | PIEZO IGNITOR |
| 25 | 28039 | 31252 | PILOT BRACKET |
| 26 | - | R11127 | CONTROL BOARD, PROFLAME |
| 27 | - | R11236 | REMOTE |
| 28 | - | R11235 | RECEIVER |
| 29 | - | R11128 | POWER ADAPTOR, 7.0 VDC |
| 30 | - | R11122 | BATTERY HOLDER, AA WITH SNAP-ON |
| 31 | - | R11123 | WIRE HARNESS, PROFLAME DFC |
| 32 | - | R11237 | WIRE HARNESS, RECEIVER |
| 33 | - | 29382 | MODULE TRAY |
| 34 | - | R2423 | CONNECTOR |
| 35 | - | 31670 | PILOT SHIELD |
| 36 | - | R11597 | FERRULE, SLEEVE |
| 37 | - | R11598 | NUT, INVERTED |
| N/S | R5668 | R11333 | IGNITOR WIRE |
| N/S | R10947 | - | REMOTE/OFF/ON HARNESS |
| N/S | - | R11332 | SENSOR WIRE - 24" |

N/S - Not Shown

# EXPLODED VIEW

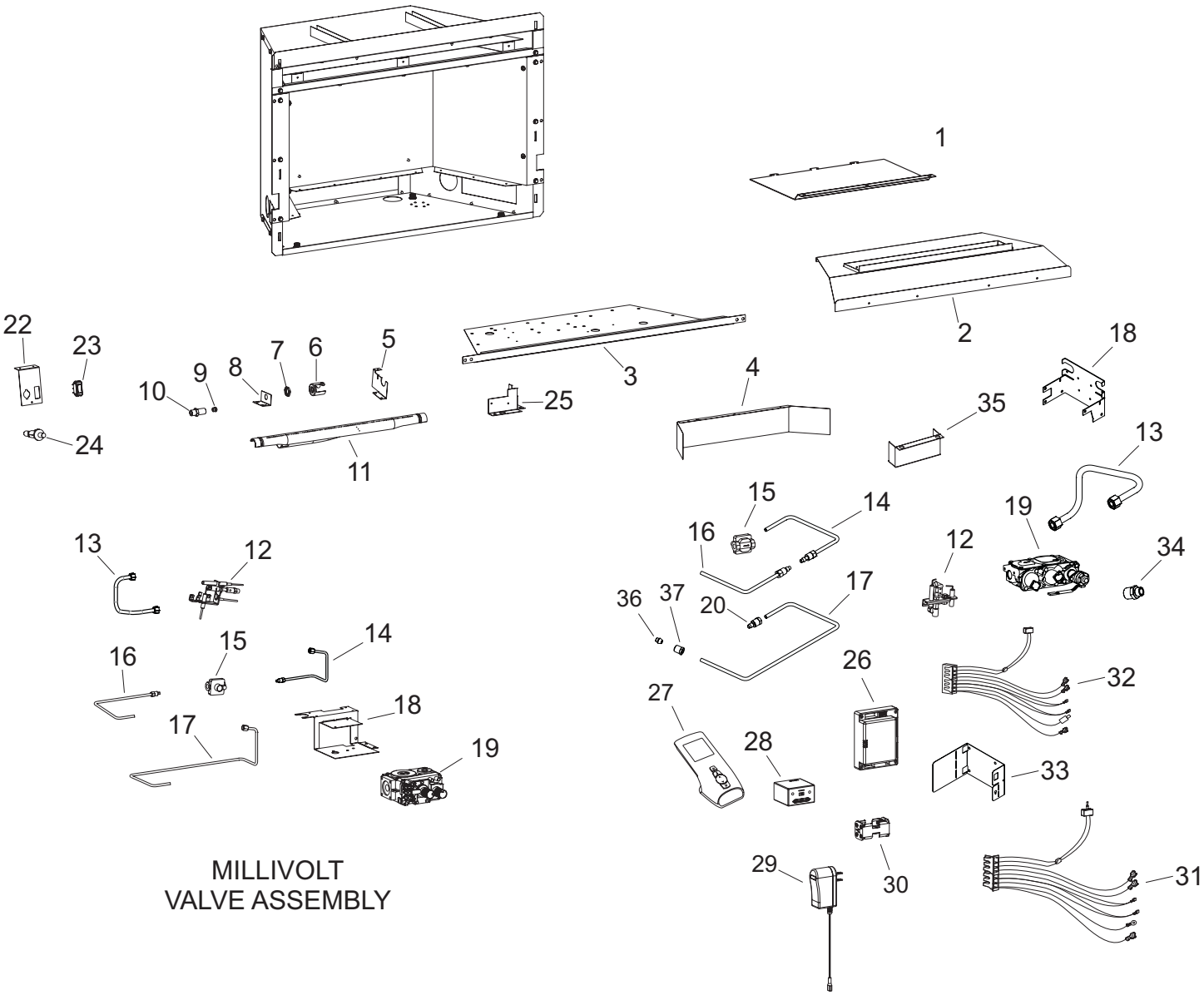


MILLIVOLT
VALVE ASSEMBLY

IP VALVE ASSEMBLY

# MASTER PARTS DISTRIBUTOR LIST

To Order Parts Under Warranty, please contact your local Empire dealer. See the dealer locator at www.empirecomfort.com. To provide warranty service, your dealer will need your name and address, purchase date and serial number, and the nature of the problem with the unit.

To Order Parts After the Warranty Period, please contact your dealer or one of the Master Parts Distributors listed below. This list changes from time to time. For the current list, please click on the Master Parts button at www.empirecomfort.com. Please note: Master Parts Distributors are independent businesses that stock the most commonly ordered Original Equipment repair parts for Heaters, Grills, and Fireplaces manufactured by Empire Comfort Systems Inc.

**Dey Distributing**
1401 Willow Lake Boulevard
Vadnais Heights, MN 55101

**Phone:** 651-490-9191
**Toll Free:** 800-397-1339
**Website:** www.deydistributing.com
**Parts: Heater, Hearth and Grills**

**Victor Division of F. W. Webb Company**
200 Locust Street
Hartford, CT 06114

**Phone:** 860-722-2433
**Toll Free:** 800-243-9360
**Fax:** 860-293-0479
**Toll Free Fax:** 800-274-2004
**Websites:** www.fwwebb.com & www.victormfg.com
**Parts: Heater, Hearth and Grills**

**East Coast Energy Products**
10 East Route 36
West Long Branch, NJ 07764

**Phone:** 732-870-8809
**Toll Free:** 800-755-8809
**Fax:** 732-870-8811
**Website:** www.eastcoastenergy.com
**Parts: Heater, Hearth and Grills**

**Able Distributors**
2501 North Central Avenue
Chicago, IL 60639

**Phone:** 773-889-5555
**Toll Free:** 800-880-2253
**Fax:** 773-466-1118
**Website: www. abledistributors.com**
**Parts: Heater**

# HOW TO ORDER REPAIR PARTS

**Parts Not Under Warranty**

Parts can be ordered through your Service Person, Dealer, or a Master Parts Distributor. See this page for the Master Parts Distributors list. For best results, the **service person or dealer** should order parts through the distributor. Parts can be shipped directly to the **service person/dealer**.

**Warranty Parts**

Warranty parts will need a proof of purchase and can be ordered by your Service Person or Dealer. Proof of purchase is **required** for warranty parts.

All parts listed in the Parts List have a Part Number. When ordering parts, first obtain the Model Number and Serial Number from the name plate on your equipment. Then determine the Part Number (**not** the Index Number) and the Description of each part from the following illustration and part list. Be sure to give all this information . . .

Appliance Model Number _____ Part Description _____

Appliance Serial Number _____ Part Number _____

Type of Gas (Propane or Natural) _____

Do not order bolts, screws, washers or nuts. They are standard hardware items and can be purchased at any local hardware store.

Shipments contingent upon strikes, fires and all causes beyond our control.

# DF(20,28)LBL SURROUND FRONTS FOR FIREPLACES

This fireplace requires a surround, available from your Empire Comfort Systems dealer. The surround shown below allows the fireplace to be installed as an insert in an existing fireplace or in a mantel. For elevated installation in a wall, see the surrounds on the following page. If you need additional information beyond what your dealer can furnish, contact Empire Comfort Systems Inc., Nine Eighteen Freeburg Ave., Belleville, Illinois 62220.

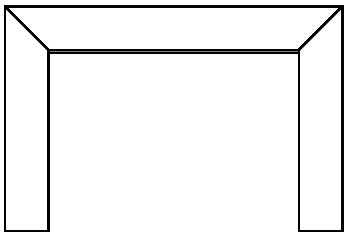

6x6 Surround

- Black

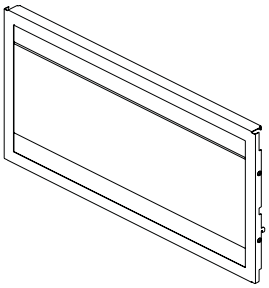

Glass Door Frame

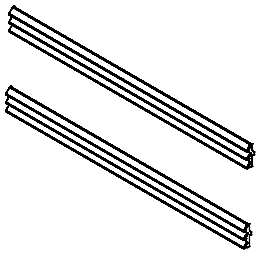

Louvers 45 Deg

- Black (Standard)

## Insert Accessories

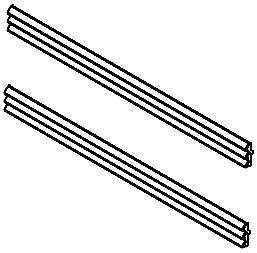

- Hammered Pewter
- Stainless

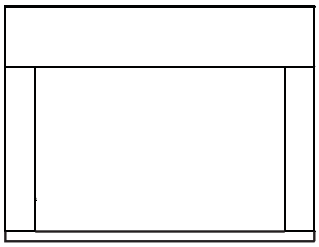

Shroud

- Black

The shroud provides a transition from the fireplace/insert to your existing hearth opening up to 48 x 36 inches. Requires a surround.

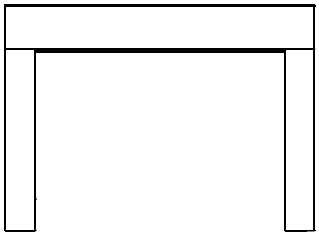

Surround

- Black

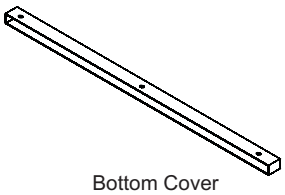

Bottom Cover

- Black

Used to finish off bottom of insert and surround panels when installed in a fireplace without a flush hearth extension. To be used with surround kits.

# SURROUND FRONTS FOR WALL MOUNTS

The fireplace requires a surround, available from your Empire Comfort Systems dealer. The surrounds shown below allow the fireplace to be installed elevated in a wall. For installation as an insert in an existing fireplace or in a mantel, see the fronts on the previous page.

**Glass Front - DF(20,28)GBL**
Glass panel with mounting brackets, shield and hardware.

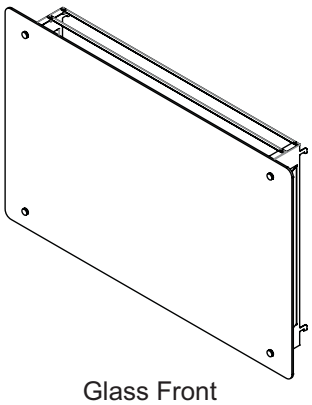

Glass Front

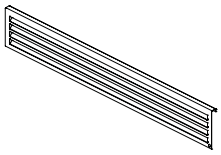

Bottom Shield

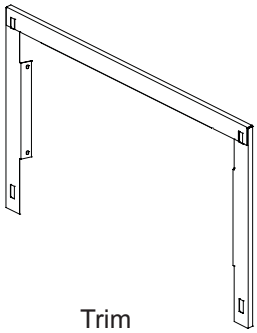

Trim

**Metal Picture Frame - DF(20,28)MBL**
With glass panel (concealed louvers on top)

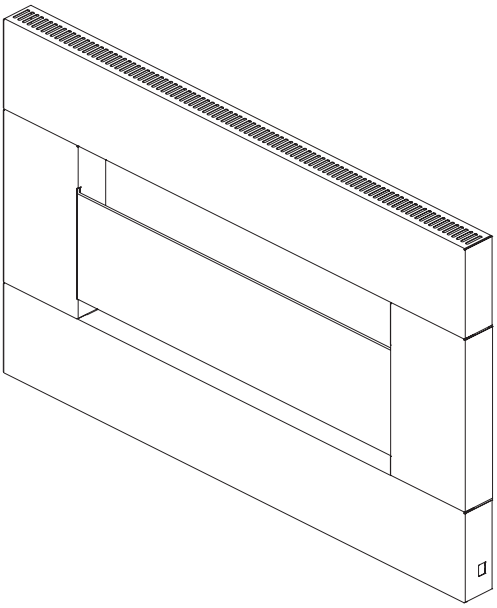

# APPLIANCE SERVICE HISTORY

| Date | Dealer Name | Service Technician Name | Service Performed/Notes |
|---|---|---|---|
| | | | |
| | | | |
| | | | |
| | | | |
| | | | |
| | | | |
| | | | |
| | | | |
| | | | |
| | | | |
| | | | |

# WARRANTY

Empire Comfort Systems Inc. warranties this hearth product to be free from defects at the time of purchase and for the periods specified below. Hearth products must be installed by a qualified technician and must be maintained and operated safely, in accordance with the instructions in the owner's manual. This warranty applies to the original purchaser only and is not transferable. All warranty repairs must be accomplished by a qualified gas appliance technician.

***Limited Lifetime Parts Warranty with a Five-Year Limited Labor Warranty – Combustion Chamber and Heat Exchanger***

If the combustion chamber or heat exchanger (see parts list) fails because of defective workmanship or material, Empire will repair or replace at Empire's option.

Within five years from the date of purchase, Empire will pay reasonable labor to have the defective part repaired or replaced at Empire's option.

***Limited Five-Year Parts & Labor Warranty – All Other Components***

(Except Remote Controls, Thermostats, Accessories and Replacement Parts)

Should any part fail because of defective workmanship or material within five years from the date of purchase, Empire will repair or replace at Empire's option.

Within five years from the date of purchase, Empire will pay reasonable labor to have that defect repaired at Empire's option.

***Limited One-Year Parts Warranty – Remote Controls, Thermostats, Accessories, and Parts***

Should any remote control, thermostat, accessory, or other part fail because of defective workmanship within one year from the date of purchase, Empire will repair or replace at Empire's option.

***Duties Of The Owner***

The appliance must be installed by a qualified installer and operated in accordance with the instructions furnished with the appliance.

A bill of sale, cancelled check, or payment record should be kept to verify purchase date and establish warranty period.

Ready access to the appliance for service.

***What Is Not Covered***

Damages that might result from the use, misuse, or improper installation of this appliance.

Travel, diagnostic costs and freight charges on warranted parts to and from the factory.

Claims that do not involve defective workmanship or materials.

Unauthorized service or parts replacements.

Removal and reinstallation cost.

Inoperable due to improper or lack of maintenance.

***How To Get Service***

To make a claim under this warranty, please have your receipt available and contact your installing dealer. Provide the dealer with the model number, serial number, type of gas, and purchase verification. The installing dealer is responsible for providing service and will contact the factory to initiate any warranted parts replacements. Empire will make replacement parts available at the factory. Shipping expenses are not covered.

If, after contacting your Empire dealer, service received has not been satisfactory, contact: Consumer Relations Department, Empire Comfort Systems Inc., PO Box 529, Belleville, Illinois 62222, or send an e-mail to info@empirecomfort.com with "Consumer Relations" in the subject line.

***Your Rights Under State Law***

This warranty gives your specific legal rights, and you may also have other rights, which vary from state to state.

Empire Comfort Systems Inc.
918 Freeburg Ave. Belleville, IL 62220

If you have a general question about our products, please e-mail us at info@empirecomfort.com.
If you have a service or repair question, please contact your dealer.

**www.empirecomfort.com**